LIMITLESS FOR YOU

CHANNEL SYSTEM

Modular Channel

DOTAIT AMERICA


DOTAIT
AMERICA

CONTENTS

04-09 · · · About Us

10 · · · POSMAC Test

11 · · · GEOCOTE Report

12-14 · · · Technical Data

15-18 · · · Test Report

19-43 · · · Modular Channel

- Modular Channel
- Accessory Fastener
- Brackets
- Cantilever Bracing
- Connector
- Angle Bracket
- Base Connectors
- Baseplate
- Beam Clamp
- Channel Clamp
- End Cap
- Accessories For Installation
- Pipe Clamp
- U-Band

LoadRunner

MODULAR CHANNEL SYSTEM

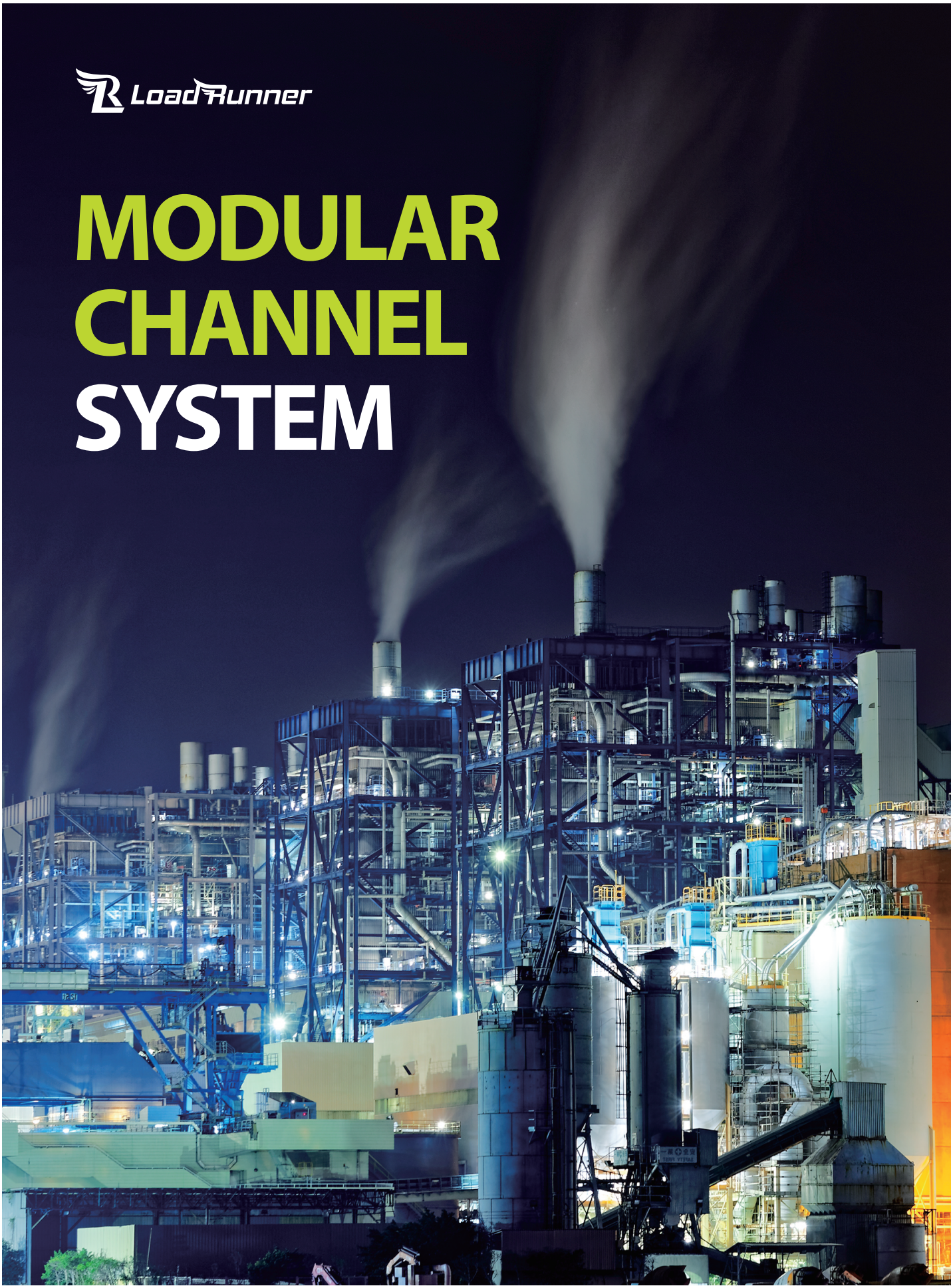



New Starts with LOAD RUNNER

DOOTAIT America has begun its business since year 2011 to deliver steel outfitting for Shipbuilding and mainly Offshore industries. DOOTAIT has lately launched Load Runner which is an eco-friendly modular support channel to satisfy customers requirements along the latest global trend in various industries.

Load Runner is based on PosMAC steel and GEOCOTE coating so, re-usable and eco-friendly. DOOTAIT supports customers by offering total service including cutting, pre-assembly, engi-neering and seismic design review. In addition, DOOTAIT pursues maximization of field productivity and safety through its own differentiated Smart Project Management with utilization of channel lifting AGV and collaborative robot for automated bolt-ing.

DOOTAIT has delivered not only basic U shape but also custom-made support, racks, stands and various kinds of accessories to meet requested delivery time and eventually make no delay on con-struction progress. DOOTAIT pursues sustainable growth and put our efforts into satisfying customers requirements from diverse industries including Offshore,LNG vessel, Petrochemical refinery, Wind · Thermal · Solar power plant, Microchip factory, Data center etc.


Offshore plant


Wind power plant


LNG ship


Refinery plant

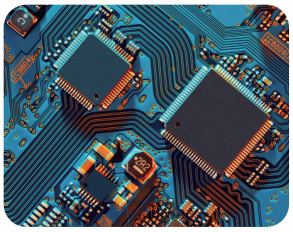
Semi-conductor plant


Data center


Thermal power plant


Solar power plant

We Provide a diverse portfolio tailored to the needs of each Industry and application

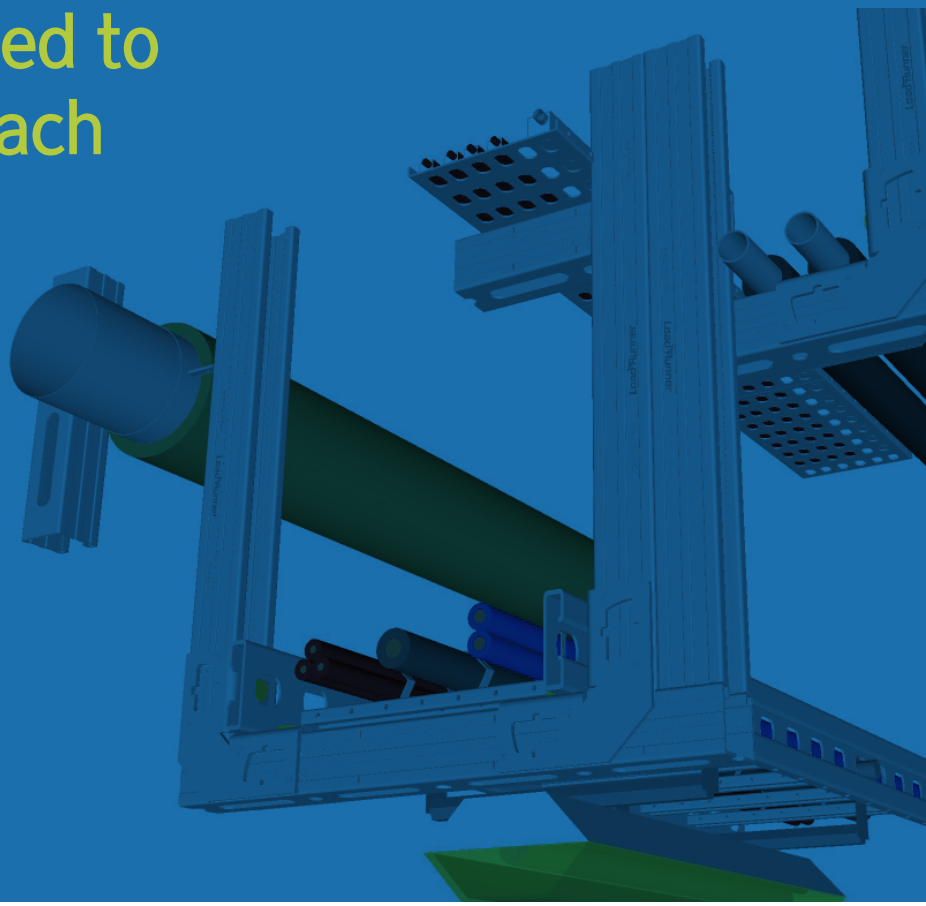

Certificate

Acquiring the international quality standard ISO 9001, ISO 14001, and ISO 45001,
we have maintained high level of Quality and HSE management.



Quality Management System
(ISO 9001)



OHSMS(Occupational Health and
Safety Management System)
(ISO 45001)



Environment management system
(ISO 14001)

Factory

BUSAN





YANGJU







DOOTAIT AMERICA

Equipment

We are maximizing production efficiency with the latest equipment and innovative technology



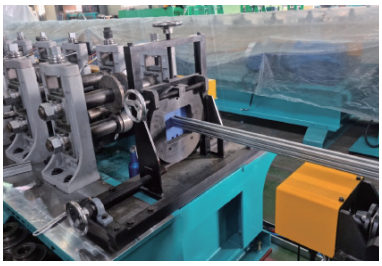



Uncoiler / NC roll feeder / CS press 200 tons / CA Forming Machine 24 Step Line / Punching and Embossing

Guide crimping roll / CNC laser cutting machine / CNC Hydraulic Bending Machine

Collaborative robot / Dust collector / High speed cutter / Label tag machine


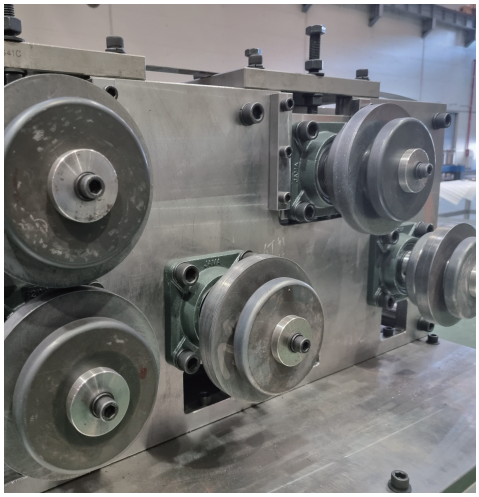


Air feeder / Straightening machine / Laser welding machine / CO2 welding machine

Test machine / Cocking machine

DOOTAIT AMERICA

Environment & Smart Modular system

LIMITLESS FOR YOU Environment & Smart Modular system

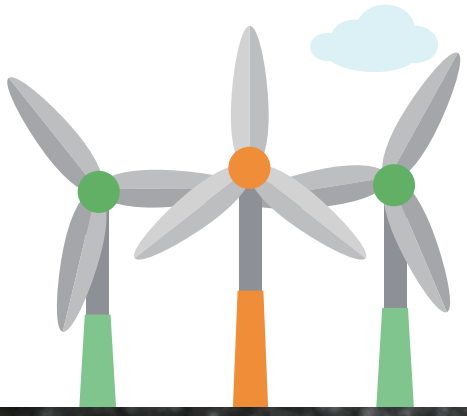

Eco-friendly system

- **Reusable** — Reusable
- **GEOCOTE** — Non-detection of 4 major heavy metals and hazardous substances in green certification(ROHs)
- **Chrome Free** — Use of Chrome-free film plating

Smart system

- **Smart Project** — Channel module automatic lifting automatic channel bolting robot
- **Engineering** — Structural review/ seismic design/ BIM
- **Total Service** — Channel cutting/ assembly field training

DOOTAIT AMERICA

PosMAC 3.0 Corrosion resistance test

CCT	GI (H)				Galvaume	PosMAC3.0		
Total coating weight	120g/m²	200g/m²	300g/m²	600g/m²	100g/m²	140g/m²	200g/m²	275g/m²
10 cycle (80Hr)		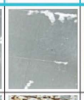		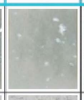				
70 cycle (560Hr)		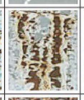	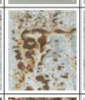	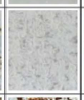				
120 cycle (960Hr)								

SST	GI (H)	Galvaume	PosMAC 3.0	
Total coating weight	600g/m²	100g/m²	200g/m²	350g/m²
480Hr				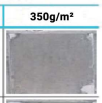
720Hr				
1440Hr				
2400Hr				

Comparison of corrosion resistance of flat panel with Hot dip galvanizing(GI(H)), posMAC3.0, and galvalume (CCT)

- PosMAC 3.0 panel shows 5~10 times stronger corrosion resistance than the hot dip galvanized panel.
- Also, PosMAC 3.0 shows an equivalent or higher level of corrosion test compared to galvanizing

(CCT, Cyclic Corrosion Test)
[ISO 14993] 1Cycle : Applying salt spray 2Hr(5%%NaCl, 35%) → Dry 4Hr(25%RH, 60 °C) → Moisturizing 2Hr(95%RH, 50°C)

Comparison of corrosion resistance of flat panel with Hot dip galvanizing(GI(H)), posMAC3.0, and galvalume (SST)

- PosMAC 3.0 panel shows 5~10 times stronger corrosion resistance than the hot dip galvanized panel.
- Also, PosMAC 3.0 shows an equivalent or higher level of corrosion test compared to galvanizing

(SST, Salt Spray Test)
[ISO 9227, JIS Z2371, ASTM B117] 5%NaCl, 35℃

PosMAC 3.0 corrosion resitance of sheared edge

When a sheared edge occurs, the upper plating layer melts to cover the cross-section and promotes the growth of stable corrosion products. However, red rust will occur on the already exposed steel plate. After that, if the sheared edge is coated with a film of corrosion products, it prevents the corrosion of the cross section.

DOTAIT AMERICA

GEOCOTE test report

Accessories(Bolts, Connectors)

ROHs heavy metal inspection report and reliability evaluation
– No detection of Cd, Pb, Hg, Cr hazardous heavy metals

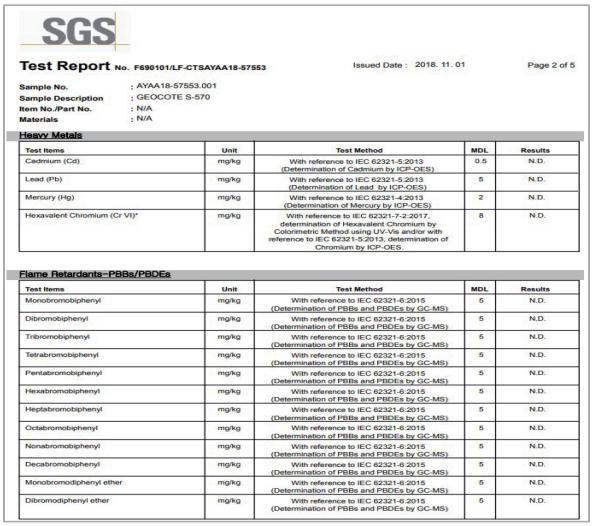

SGS

Test Report No. F690101/LF-CTSAYAA18-57553 Issued Date : 2018. 11. 01 Page 2 of 5

Sample No. : AYAA18-57553.001
Sample Description : GEOCOTE S-570
Item No./Part No. : N/A
Materials : N/A

Heavy Metals

Test Items	Unit	Test Method	MDL	Results
Cadmium (Cd)	mg/kg	With reference to IEC 62321-5:2013 (Determination of Cadmium by ICP-OES)	0.5	N.D.
Lead (Pb)	mg/kg	With reference to IEC 62321-5:2013 (Determination of Lead by ICP-OES)	5	N.D.
Mercury (Hg)	mg/kg	With reference to IEC 62321-4:2013 (Determination of Mercury by ICP-OES)	2	N.D.
Hexavalent Chromium (Cr VI)*	mg/kg	With reference to IEC 62321-7-2:2017, determination of Hexavalent Chromium by Colorimetric Method using UV-Vis and/or with reference to IEC 62321-5:2013, determination of Chromium by ICP-OES.	8	N.D.

Flame Retardants–PBBs/PBDEs

Test Items	Unit	Test Method	MDL	Results
Monobromobiphenyl	mg/kg	With reference to IEC 62321-6:2015 (Determination of PBBs and PBDEs by GC-MS)	5	N.D.
Dibromobiphenyl	mg/kg	With reference to IEC 62321-6:2015 (Determination of PBBs and PBDEs by GC-MS)	5	N.D.
Tribromobiphenyl	mg/kg	With reference to IEC 62321-6:2015 (Determination of PBBs and PBDEs by GC-MS)	5	N.D.
Tetrabromobiphenyl	mg/kg	With reference to IEC 62321-6:2015 (Determination of PBBs and PBDEs by GC-MS)	5	N.D.
Pentabromobiphenyl	mg/kg	With reference to IEC 62321-6:2015 (Determination of PBBs and PBDEs by GC-MS)	5	N.D.
Hexabromobiphenyl	mg/kg	With reference to IEC 62321-6:2015 (Determination of PBBs and PBDEs by GC-MS)	5	N.D.
Heptabromobiphenyl	mg/kg	With reference to IEC 62321-6:2015 (Determination of PBBs and PBDEs by GC-MS)	5	N.D.
Octabromobiphenyl	mg/kg	With reference to IEC 62321-6:2015 (Determination of PBBs and PBDEs by GC-MS)	5	N.D.
Nonabromobiphenyl	mg/kg	With reference to IEC 62321-6:2015 (Determination of PBBs and PBDEs by GC-MS)	5	N.D.
Decabromobiphenyl	mg/kg	With reference to IEC 62321-6:2015 (Determination of PBBs and PBDEs by GC-MS)	5	N.D.
Monobromodiphenyl ether	mg/kg	With reference to IEC 62321-6:2015 (Determination of PBBs and PBDEs by GC-MS)	5	N.D.
Dibromodiphenyl ether	mg/kg	With reference to IEC 62321-6:2015 (Determination of PBBs and PBDEs by GC-MS)	5	N.D.

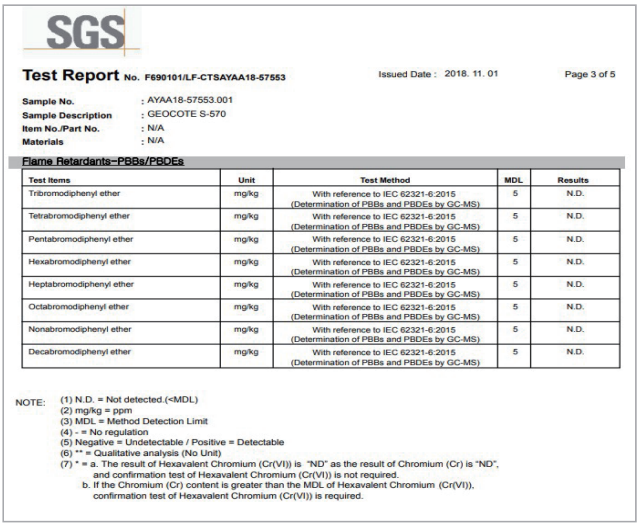

SGS

Test Report No. F690101/LF-CTSAYAA18-57553 Issued Date : 2018. 11. 01 Page 3 of 5

Sample No. : AYAA18-57553.001
Sample Description : GEOCOTE S-570
Item No./Part No. : N/A
Materials : N/A

Flame Retardants–PBBs/PBDEs

Test Items	Unit	Test Method	MDL	Results
Tribromodiphenyl ether	mg/kg	With reference to IEC 62321-6:2015 (Determination of PBBs and PBDEs by GC-MS)	5	N.D.
Tetrabromodiphenyl ether	mg/kg	With reference to IEC 62321-6:2015 (Determination of PBBs and PBDEs by GC-MS)	5	N.D.
Pentabromodiphenyl ether	mg/kg	With reference to IEC 62321-6:2015 (Determination of PBBs and PBDEs by GC-MS)	5	N.D.
Hexabromodiphenyl ether	mg/kg	With reference to IEC 62321-6:2015 (Determination of PBBs and PBDEs by GC-MS)	5	N.D.
Heptabromodiphenyl ether	mg/kg	With reference to IEC 62321-6:2015 (Determination of PBBs and PBDEs by GC-MS)	5	N.D.
Octabromodiphenyl ether	mg/kg	With reference to IEC 62321-6:2015 (Determination of PBBs and PBDEs by GC-MS)	5	N.D.
Nonabromodiphenyl ether	mg/kg	With reference to IEC 62321-6:2015 (Determination of PBBs and PBDEs by GC-MS)	5	N.D.
Decabromodiphenyl ether	mg/kg	With reference to IEC 62321-6:2015 (Determination of PBBs and PBDEs by GC-MS)	5	N.D.

NOTE: (1) N.D. = Not detected (<MDL)
(2) mg/kg = ppm
(3) MDL = Method Detection Limit
(4) - = No regulation
(5) Negative = Undetectable / Positive = Detectable
(6) ** = Qualitative analysis (No Unit)
(7) * = a. The result of Hexavalent Chromium (Cr(VI)) is "ND" as the result of Chromium (Cr) is "ND", and confirmation test of Hexavalent Chromium (Cr(VI)) is not required.
b. If the Chromium (Cr) content is greater than the MDL of Hexavalent Chromium (Cr(VI)), confirmation test of Hexavalent Chromium (Cr(VI)) is required.

Galvanizing vs GEOCOTE specification

Electro galvanizing vs
Hot dip galvanizing vs
Zinc Flake Coating

Contents		Elec. Galv.	Hot Dip Galv.	Zinc Flake Coating
Appearance		Silver white/yellow	Silver white	Silver gray
Main Components		Zn	Zn	Zn, Si, Al
DFT (Dry Film Thickness)		5㎛	More than 60㎛	6~8㎛
NSST		Below 240 Hrs	Below 500 Hrs	More than 1,500 Hrs
Fastening of Fasteners		Excellence	No Good (Over Tap)	Excellence
Hydrogen Brittleness		Occurrence	Occurrence	Non-occurrence
Adhesion with Paint		Average	Average	Excellence
Weldability	Welding State	Average	Average	Excellence
	Noxious Gases	Much quantity	Tiny quantity	Tiny quantity

Galvanizing vs GEOCOTE salt spray

Test per steel grade after
applying GEOCOTE

Type	Before NSS TEST	After 500hours	After 1000hours	After 1500hours
GEOCOTE™ (8~10㎛)				
Result	OK	OK	OK	OK
SUS-304				
Result	OK	OK	OK	NG
Hot-Dip Galv. (60~80㎛)		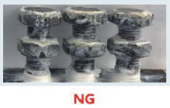		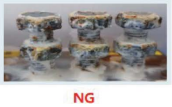
Result	OK	NG	NG	NG

LIMITLESS FOR YOU Environment & Smart Modular system

DOOTAIT AMERICA

TECHNICAL DATA

Channel Performance

Technical Data		Channel Sections							
		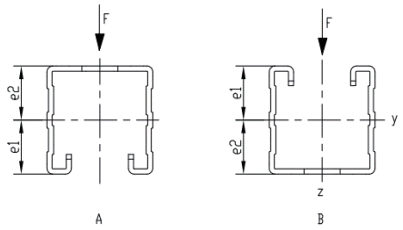							
		LR21	LR41	LR62(2.3)	LR62(2.75)	LR21D	LR41D	LR62D(2.3)	LR62D(2.75)
CHANNEL THICKNESS	MM	2	2	2.3	2.75	2	2	2.3	2.75
CROSS-SECTION AREA	MM^2	175.2	258.4	381.4	450.6	352.36	518.7	782.6	910.3
UNIT WEIGHT	KG/M	1.3	2	3	3.5	2.7	4	6.1	7.1
YIELD STRENGTH	N/MM^2	280							
TENSILE STRENGTH	N/MM^2	360							
E-MODUL	N/MM^2	210000							
Y-AXIS									
AXIS OF GRAVITY "OPEN"	MM	11.1	21	31.2	31.7	21	41.2	62	62
AXIS OF GRAVITY	MM	10.1	20.2	31	30.5	21	41.2	62	62
MOMENT OF INERTIA	MM^4	10337.2	55164.4	173165.5	201792.4	56731.57	320945.1	1088390.9	1242420.5
SECTION MODULUS "OPEN"	MM^3	935.1	2625.7	5583.9	6366.6	2676.02	7789.9	17498.2	19974.6
SECTION MODULUS	MM^3	1018.9	2732.2	5552.3	6615.13	2676.02	7789.9	17498.2	19974.6
RADIUS OF GYRATION	MM	7.7	14.6	21.3	21.2	12.69	24.9	37.3	36.9
MAX. MOMENT	NM	174.6	490.1	1036.4	1188.4	499.5	1454.1	3266.3	3728.6
Z-AXIS									
MOMENT OF INERTIA	MM^4	46631.3	76971.8	114886.729	132570.2	91842.79	152523.7	236200.584	271159
SECTION MODULUS	MM^3	2263.7	3736.5	5577.03	6435.46	4458.39	7404.1	11466.05	13163.1
RADIUS OF GYRATION	MM	16.3	17.3	17.4	17.2	16.14	17.1	17.4	17.3

Channel Load table

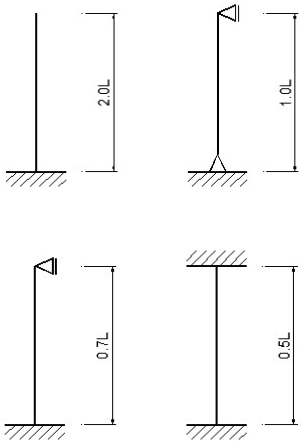

Effective length [mm]	LR21 [kN]	LR41 [kN]	LR62(2.3) [kN]	LR62(2.75) [kN]	LR21D [kN]	LR41D [kN]	LR62D(2.3) [kN]	LR62D(2.75) [kN]
250	37.58	66.72	100.76	118.89	88.73	136.85	206.79	240.34
500	22.08	54.09	86.17	101.34	68.15	116.64	176.89	205.22
750	13.09	41.11	69.41	81.33	49.15	93.60	142.54	165.03
1000	9.91	30.78	54.56	63.72	35.35	73.33	112.07	129.51
1250	6.34	23.26	42.79	49.84	34.80	57.36	87.91	101.45
1500	4.40	17.91	33.86	39.36	24.16	45.30	69.57	80.20
1750	3.23	17.26	27.16	31.53	17.75	36.28	55.82	64.29
2000	2.48	13.22	22.11	25.64	13.59	29.50	45.45	52.32
2250	1.96	10.44	21.75	25.10	10.74	28.87	44.71	51.33
2500	1.59	8.46	17.62	20.33	8.70	23.39	36.22	41.58
2750	1.31	6.99	14.56	16.80	7.19	19.33	29.93	34.36
3000	1.10	5.87	12.23	14.12	6.04	16.24	25.15	28.87

TECHNICAL DATA

Channel Load table

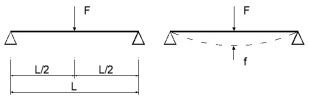

Span width [mm]	Maximum load, F [kN] / Deflection, f [mm]															
	LR21		LR41		LR62 (2.3)		LR62 (2.75)		LR21D		LR41D		LR62 (2.3)		LR62D (2.75)	
	F(kN)	f(mm)	F(kN)	f(mm)	F(kN)	f(mm)	F(kN)	f(mm)	F(kN)	f(mm)	F(kN)	f(mm)	F(kN)	f(mm)	F(kN)	f(mm)
250	2.79	0.41	7.64	0.21	16.24	0.15	18.51	0.14	7.78	0.21	22.65	0.11	50.89	0.07	58.09	0.07
500	1.36	1.63	3.81	0.86	8.11	0.58	9.25	0.57	3.89	0.85	11.32	0.44	25.43	0.29	29.03	0.29
750	0.92	3.75	2.54	1.93	5.40	1.31	6.16	1.28	2.58	1.92	7.54	0.99	16.94	0.65	19.34	0.65
1000	0.51	5.00	1.90	3.44	4.05	2.33	4.61	2.28	1.93	3.41	5.65	1.75	12.69	1.16	14.49	1.16
1250	0.33	6.25	1.52	5.38	3.23	3.64	3.68	3.56	1.54	5.33	4.51	2.74	10.14	1.81	11.58	1.81
1500	0.22	7.50	1.22	7.50	2.69	5.24	3.06	5.13	1.25	7.50	3.75	3.95	8.44	2.61	9.63	2.61
1750	0.16	8.75	0.89	8.75	2.29	7.14	2.62	6.99	0.91	8.75	3.20	5.38	7.22	3.56	8.24	3.56
2000	0.12	10.00	0.68	10.00	2.00	9.34	2.28	9.15	0.69	10.00	2.79	7.03	6.30	4.65	7.19	4.65
2250	0.09	11.25	0.53	11.25	1.69	11.25	1.97	11.25	0.54	11.25	2.47	8.90	5.59	5.89	6.38	5.89
2500	0.07	12.50	0.42	12.50	1.36	12.50	1.58	12.50	0.42	12.50	2.22	11.00	5.02	7.28	5.72	7.28
2750	0.05	13.75	0.34	13.75	1.11	13.75	1.30	13.75	0.34	13.75	2.01	13.33	4.45	8.81	5.19	8.81
3000	0.04	15.00	0.28	15.00	0.93	15.00	1.08	15.00	0.28	15.00	1.74	15.00	4.15	10.49	4.74	10.49
3250	0.03	16.25	0.23	16.25	0.78	16.25	0.91	16.25	0.23	16.25	1.47	16.25	3.82	12.33	4.36	12.33
3500			0.19	17.50	0.66	17.50	0.77	17.50	0.19	17.50	1.25	17.50	3.53	14.31	4.03	14.31
3750			0.16	18.75	0.57	18.75	0.66	18.75	0.15	18.75	1.08	18.75	3.28	16.45	3.74	16.45
4000			0.13	20.00	0.49	20.00	0.57	20.00	0.13	20.00	0.93	20.00	3.06	18.73	3.49	18.74
4250			0.11	21.25	0.42	21.25	0.49	21.25	0.10	21.25	0.81	21.25	2.87	21.17	3.32	21.25
4500			0.09	22.50	0.36	22.50	0.43	22.50	0.08	22.50	0.71	22.50	2.57	22.50	2.94	22.50
4750			0.08	23.75	0.32	23.75	0.37	23.75	0.06	23.75	0.62	23.75	2.29	23.75	2.61	23.75
5000			0.06	25.00	0.28	25.00	0.32	25.00	0.05	25.00	0.55	25.00	2.04	25.00	2.33	25.00

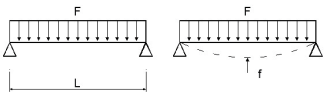

Span width [mm]	Maximum load, F [kN] / Deflection, f [mm]															
	LR21		LR41		LR62 (2.3)		LR62 (2.75)		LR21D		LR41D		LR62 (2.3)		LR62D (2.75)	
	F(kN/m)	f(mm)	F(kN/m)	f(mm)	F(kN/m)	f(mm)	F(kN/m)	f(mm)	F(kN/m)	f(mm)	F(kN/m)	f(mm)	F(kN/m)	f(mm)	F(kN/m)	f(mm)
250	21.75	0.51	61.08	0.27	129.91	0.18	148.12	0.18	62.25	0.27	181.23	0.14	407.13	0.09	464.75	0.09
500	5.43	2.04	15.26	1.07	32.46	0.73	37.00	0.71	15.54	1.06	45.28	0.55	101.74	0.36	116.13	0.36
750	1.96	3.75	6.77	2.41	14.41	1.64	16.43	1.60	6.89	2.39	20.10	1.23	45.18	0.82	51.58	0.82
1000	0.82	5.00	3.80	4.29	8.09	2.91	9.23	2.85	3.87	4.25	11.29	2.19	25.39	1.45	28.98	1.45
1250	0.41	6.25	2.26	6.25	5.17	4.54	5.89	4.45	2.32	6.25	7.21	3.42	16.23	2.27	18.52	2.27
1500	0.23	7.50	1.30	7.50	3.58	6.54	4.08	6.40	1.33	7.50	5.00	4.92	11.25	3.26	12.84	3.26
1750	0.14	8.75	0.81	8.75	2.58	8.75	3.00	8.75	0.83	8.75	3.66	6.70	8.25	4.44	9.42	4.44
2000	0.09	10.00	0.54	10.00	1.72	10.00	2.00	10.00	0.55	10.00	2.79	8.76	6.30	5.80	7.19	5.80
2250	0.06	11.25	0.37	11.25	1.20	11.25	1.39	11.25	0.39	11.25	2.23	11.25	4.97	7.34	5.67	7.34
2500	0.04	12.50	0.27	12.50	0.86	12.50	1.01	12.50	0.27	12.50	1.62	12.50	4.01	9.06	4.58	9.06
2750	0.03	13.75	0.19	13.75	0.64	13.75	0.75	13.75	0.19	13.75	1.21	13.75	3.31	10.96	3.77	10.96
3000	0.02	15.00	0.15	15.00	0.49	15.00	0.57	15.00	0.14	15.00	0.92	15.00	2.77	13.05	3.16	13.05
3250	0.01	16.25	0.11	16.25	0.38	16.25	0.44	16.25	0.11	16.25	0.71	16.25	2.35	15.31	2.68	15.31
3500	0.01	17.50	0.08	17.50	0.30	17.50	0.35	17.50	0.08	17.50	0.56	17.50	1.99	17.50	2.27	17.50
3750			0.06	18.75	0.24	18.75	0.27	18.75	0.06	18.75	0.45	18.75	1.60	18.75	1.83	18.75
4000			0.05	20.00	0.19	20.00	0.22	20.00	0.05	20.00	0.37	20.00	1.31	20.00	1.50	20.00
4250			0.04	21.25	0.15	21.25	0.18	21.25	0.03	21.25	0.30	21.25	1.08	21.25	1.24	21.25
4500			0.03	22.50	0.12	22.50	0.14	22.50	0.02	22.50	0.24	22.50	0.90	22.50	1.03	22.50
4750			0.02	23.75	0.10	23.75	0.12	23.75	0.02	23.75	0.20	23.75	0.76	23.75	0.87	23.75
5000			0.02	25.00	0.08	25.00	0.10	25.00	0.01	25.00	0.17	25.00	0.64	25.00	0.73	25.00

DO-TAIT AMERICA

TECHNICAL DATA

Channel Load table

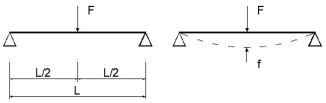

Load [kN]	Maximum span width [mm] / Deflection [mm]															
	LR21		LR41		LR62 (2.3)		LR62 (2.75)		LR21D		LR41D		LR62 (2.3)		LR62D (2.75)	
	L(mm)	d(mm)	L(mm)	d(mm)	L(mm)	d(mm)	F(kN)	d(mm)	L(mm)	d(mm)	L(mm)	d(mm)	L(mm)	d(mm)	L(mm)	d(mm)
0.25	1440	7.16	3330	16.60	5900	29.42	6370	31.77	3380	16.88	8030	40.01	14800	73.87	15800	78.74
0.50	1020	5.09	2350	11.67	4170	20.77	4500	22.40	2390	11.94	5680	28.32	10470	52.31	11190	55.94
0.75	830	4.12	1920	9.55	3410	17.04	3680	18.38	1950	9.72	4640	23.16	8540	42.58	9130	45.58
1.00	680	3.02	1660	8.23	2950	14.71	3180	15.81	1690	8.44	4020	20.08	7400	36.94	7900	39.37
1.25	544	1.93	1490	7.44	2640	13.18	2850	14.23	1510	7.53	3590	17.88	6620	33.06	7070	35.27
1.50	453	1.34	1273	5.56	2410	12.03	2600	12.96	1297	5.73	3280	16.36	6040	30.13	6460	32.29
1.75	389	0.99	1091	4.09	2230	11.12	2410	12.04	1112	4.21	3040	15.20	5590	27.86	5980	29.88
2.00	340	0.75	955	3.13	2030	9.59	2250	11.20	973	3.22	2840	14.16	5230	26.08	5590	27.90
2.25	302	0.60	849	2.47	1805	7.58	2058	9.64	865	2.55	2518	11.10	4930	24.57	5270	26.30
2.50	272	0.48	764	2.00	1624	6.14	1852	7.81	778	2.06	2266	8.99	4680	23.36	5000	24.95
2.75	247	0.40	694	1.66	1477	5.07	1684	6.45	708	1.70	2060	7.43	4460	22.24	4770	23.83
3.00	227	0.34	636	1.39	1354	4.26	1543	5.42	649	1.43	1888	6.24	4242	20.87	4560	22.71
3.50	194	0.25	546	1.02	1160	3.13	1323	3.98	556	1.05	1619	4.59	3636	15.33	4220	21.00
4.00	170	0.19	477	0.78	1015	2.40	1157	3.05	487	0.81	1416	3.51	3181	11.74	3631	15.29
4.50	151	0.15	424	0.62	902	1.89	1029	2.41	432	0.64	1259	2.77	2828	9.27	3228	12.08
5.00	136	0.12	382	0.50	812	1.53	926	1.95	389	0.52	1133	2.25	2545	7.51	2905	9.79
6.00	113	0.08	318	0.35	677	1.07	772	1.36	324	0.36	944	1.56	2121	5.22	2421	6.80
7.00	97	0.06	273	0.26	580	0.78	661	1.00	278	0.26	809	1.15	1818	3.83	2075	4.99
8.00	85	0.05	239	0.20	508	0.60	579	0.76	243	0.20	708	0.88	1591	2.93	1816	3.82

☑ Dead weight of Channel needs to be considered for load calculation

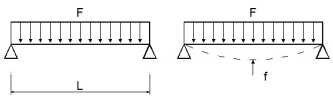

Load [kN/m]	Maximum span width [mm] / Deflection [mm]															
	LR21		LR41		LR62 (2.3)		LR62 (2.75)		LR21D		LR41D		LR62 (2.3)		LR62D (2.75)	
	L(mm)	d(mm)	L(mm)	d(mm)	L(mm)	d(mm)	L(mm)	d(mm)	L(mm)	d(mm)	L(mm)	d(mm)	L(mm)	d(mm)	L(mm)	d(mm)
0.25	1490	7.39	2610	13.04	3820	19.06	4020	20.06	2630	13.07	4690	23.37	7050	35.18	7370	36.81
0.50	1180	5.81	2070	10.32	3030	15.09	3190	15.91	2090	10.43	3720	18.50	5590	27.81	5850	29.22
0.75	1030	5.06	1810	9.05	2650	13.24	2780	13.76	1820	8.99	3250	16.17	4890	24.43	5110	25.52
1.00	940	4.68	1640	8.13	2400	11.88	2530	12.59	1660	8.30	2950	14.63	4440	22.14	4640	23.13
1.25	870	4.30	1520	7.50	2230	11.07	2350	11.71	1540	7.68	2740	13.61	4120	20.52	4310	21.53
1.50	820	4.07	1430	7.05	2100	10.45	2210	10.99	1450	7.25	2580	12.84	3880	19.37	4050	20.14
1.75	780	3.89	1360	6.73	1990	9.83	2100	10.46	1370	6.74	2450	12.18	3680	18.28	3850	19.19
2.00	740	3.60	1300	6.42	1910	9.53	2010	10.03	1310	6.44	2340	11.58	3520	17.49	3680	18.31
2.25	710	3.43	1250	6.17	1830	9.04	1930	9.59	1260	6.20	2244	11.02	3363	16.40	3540	17.63
2.50	690	3.40	1210	6.02	1770	8.79	1860	9.19	1220	6.05	2129	9.92	3191	14.76	3409	16.85
2.75	670	3.32	1170	5.79	1718	8.59	1800	8.87	1180	5.83	2030	9.02	3042	13.42	3250	15.32
3.00	650	3.21	1128	5.46	1645	7.87	1757	8.78	1150	5.73	1943	8.27	2913	12.30	3112	14.04
3.50	610	2.91	1045	4.68	1523	6.75	1627	7.53	1055	4.73	1799	7.09	2697	10.54	2881	12.03
4.00	583	2.77	977	4.10	1425	5.90	1521	6.59	986	4.14	1683	6.20	2522	9.22	2695	10.53
4.50	550	2.47	921	3.64	1343	5.25	1434	5.85	930	3.68	1587	5.51	2378	8.20	2541	9.36
5.00	522	2.22	874	3.28	1274	4.72	1361	5.27	882	3.31	1505	4.96	2256	7.38	2410	8.42
6.00	476	1.85	798	2.73	1163	3.94	1242	4.39	805	2.76	1374	4.13	2060	6.15	2200	7.02
7.00	441	1.58	739	2.34	1077	3.37	1150	3.76	746	2.37	1272	3.54	1907	5.27	2037	6.02
8.00	412	1.39	691	2.05	1008	2.95	1076	3.29	697	2.07	1190	3.10	1784	4.61	1906	5.26

☑ Dead weight of Channel needs to be considered for load calculation

TECHNICAL DATA

Korea Conformity Laboratories Test Report

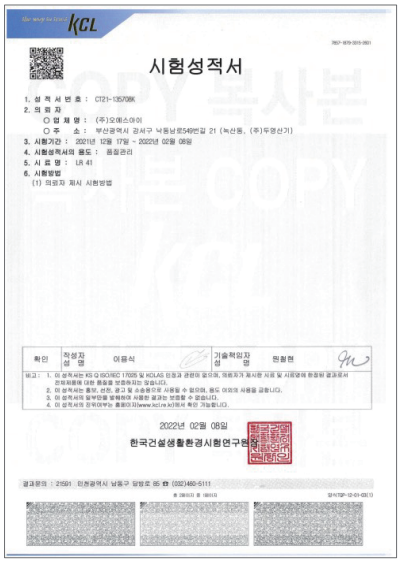
시험성적서

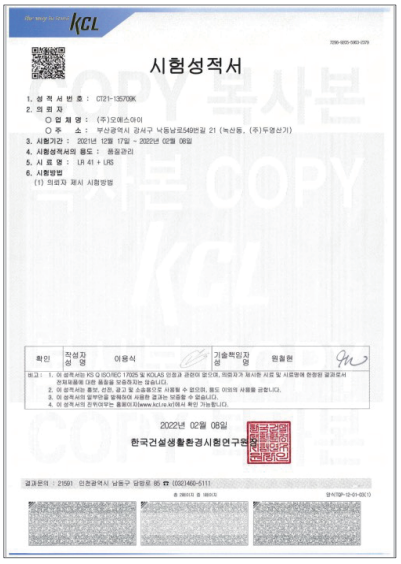
시험성적서

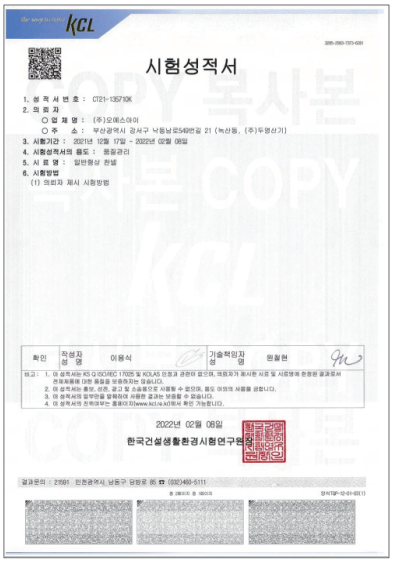
시험성적서

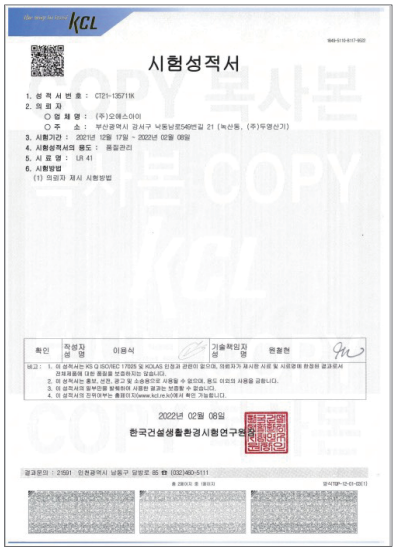
시험성적서

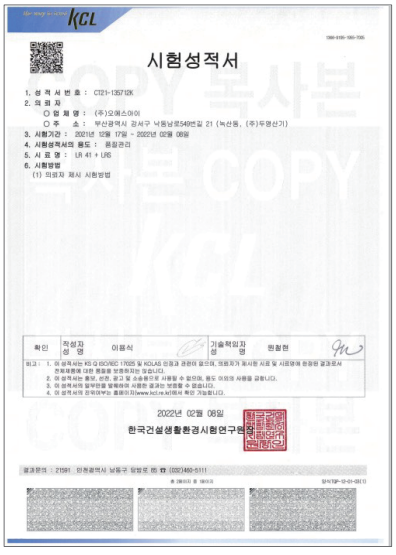
시험성적서

LIMITLESS FOR YOU Environment & Smart Modular system

TECHNICAL DATA

KTL(Korea Testing Laboratory) Test Report


시 험 성 적 서
(TEST REPORT)
ktl 한국산업기술시험원
1. 의 뢰 자 (Client)
2. 시험성적서의 용도 (Use of Report) : 품질관리용
3. 시험대상품목/물질/시료명 (Test Sample)
4. 시험기간 (Date of Test) : 2022년 10월 19일 ~ 2022년 10월 19일
5. 시험장소 (Location of Test) :
6. 시험규격/방법 (Test Standard/Method) : 의뢰자가 제시한 시험방법
7. 시험결과 (Test Results) : 부적합
2022. 11. 02.
한국산업기술시험원
FP104-05-00


시 험 성 적 서
(TEST REPORT)
ktl 한국산업기술시험원
1. 의 뢰 자 (Client)
2. 시험성적서의 용도 (Use of Report) : 품질관리용
3. 시험대상품목/물질/시료명 (Test Sample)
4. 시험기간 (Date of Test) : 2022년 10월 19일 ~ 2022년 10월 19일
5. 시험장소 (Location of Test) :
6. 시험규격/방법 (Test Standard/Method) : 의뢰자가 제시한 시험방법
7. 시험결과 (Test Results) : 부적합
2022. 11. 02.
한국산업기술시험원
FP104-05-00


시 험 성 적 서
(TEST REPORT)
ktl 한국산업기술시험원
1. 의 뢰 자 (Client)
2. 시험성적서의 용도 (Use of Report) : 품질관리용
3. 시험대상품목/물질/시료명 (Test Sample)
4. 시험기간 (Date of Test) : 2022년 10월 19일 ~ 2022년 10월 19일
5. 시험장소 (Location of Test) :
6. 시험규격/방법 (Test Standard/Method) : 의뢰자가 제시한 시험방법
7. 시험결과 (Test Results) : 부적합
2022. 11. 02.
한국산업기술시험원
FP104-05-00


시 험 성 적 서
(TEST REPORT)
ktl 한국산업기술시험원
1. 의 뢰 자 (Client)
2. 시험성적서의 용도 (Use of Report) : 품질관리용
3. 시험대상품목/물질/시료명 (Test Sample)
4. 시험기간 (Date of Test) : 2022년 09월 15일 ~ 2022년 09월 16일
5. 시험장소 (Location of Test) :
6. 시험규격/방법 (Test Standard/Method) : 의뢰자가 제시한 시험방법
7. 시험결과 (Test Results) : 부적합
2022. 09. 23.
한국산업기술시험원
FP104-05-00

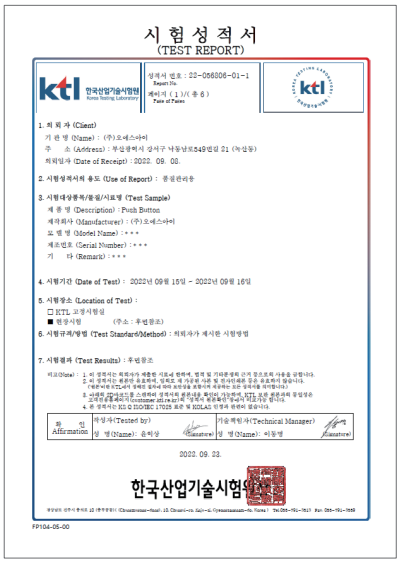
시 험 성 적 서
(TEST REPORT)
ktl 한국산업기술시험원
1. 의 뢰 자 (Client)
2. 시험성적서의 용도 (Use of Report) : 품질관리용
3. 시험대상품목/물질/시료명 (Test Sample)
4. 시험기간 (Date of Test) : 2022년 09월 15일 ~ 2022년 09월 16일
5. 시험장소 (Location of Test) :
6. 시험규격/방법 (Test Standard/Method) : 의뢰자가 제시한 시험방법
7. 시험결과 (Test Results) : 부적합
2022. 09. 23.
한국산업기술시험원
FP104-05-00

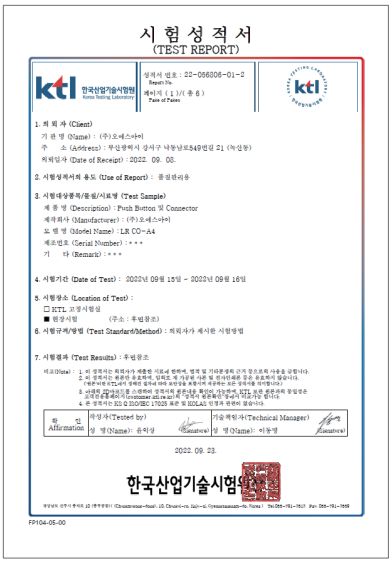
시 험 성 적 서
(TEST REPORT)
ktl 한국산업기술시험원
1. 의 뢰 자 (Client)
2. 시험성적서의 용도 (Use of Report) : 품질관리용
3. 시험대상품목/물질/시료명 (Test Sample)
4. 시험기간 (Date of Test) : 2022년 09월 15일 ~ 2022년 09월 16일
5. 시험장소 (Location of Test) :
6. 시험규격/방법 (Test Standard/Method) : 의뢰자가 제시한 시험방법
7. 시험결과 (Test Results) : 부적합
2022. 09. 23.
한국산업기술시험원
FP104-05-00

TECHNICAL DATA

KOMERI(Korea Marine Equipment Research Institute) Test Report

Salt spray(Corrosion Resistance)

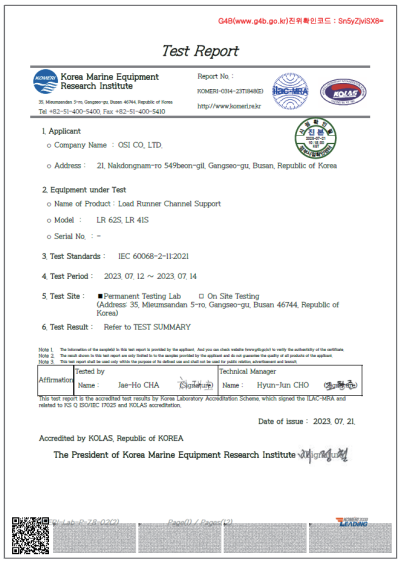

G4B(www.g4b.go.kr)진위확인코드 : Sn5yZjvISX8=

Test Report

Korea Marine Equipment Research Institute
35, Mieumsandan 5-ro, Gangseo-gu, Busan 46744, Republic of Korea
Tel +82-51-400-5400, Fax +82-51-400-5410

Report No. : KOMERI-0314-23T184KE
http://www.komeri.re.kr

1. Applicant
- Company Name : OSI CO., LTD.
- Address : 21, Nakdongnam-ro 549beon-gil, Gangseo-gu, Busan, Republic of Korea

2. Equipment under Test
- Name of Product : Load Runner Channel Support
- Model : LR 62S, LR 41S
- Serial No. : -

3. Test Standards : IEC 60068-2-11:2021

4. Test Period : 2023. 07. 12 ~ 2023. 07. 14

5. Test Site : ■ Permanent Testing Lab □ On Site Testing (Address: 35, Mieumsandan 5-ro, Gangseo-gu, Busan 46744, Republic of Korea)

6. Test Result : Refer to TEST SUMMARY

Note 1. The information of the sample(s) in this test report is provided by the applicant. And you can check website forms.g4b.go.kr to verify the authenticity of the certificate.
Note 2. The result shown in this test report are only limited to to the sample provided by the applicant and do not guarantee the quality of all products of the applicant.
Note 3. This test report shall be used only within the purpose of its defined use and shall not be used for public relation, advertisement and bench.

Affirmation	Tested by	Technical Manager
	Name : Jae-Ho CHA (Signature)	Name : Hyun-Jun CHO (Signature)

This test report is the accredited test results by Korea Laboratory Accreditation Scheme, which signed the ILAC-MRA and related to KS Q ISO/IEC 17025 and KOLAS accreditation.

Date of issue : 2023. 07. 21.

Accredited by KOLAS, Republic of KOREA

The President of Korea Marine Equipment Research Institute

Vibration(Vibration Resistance)

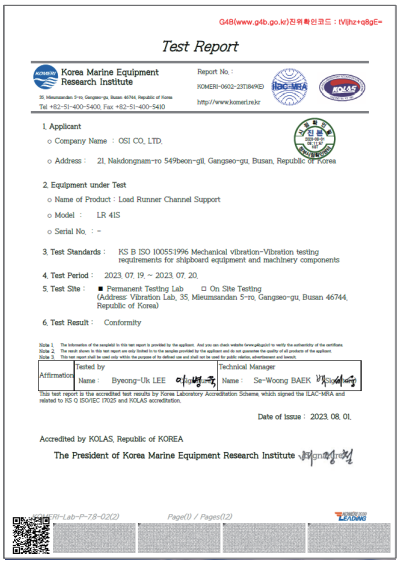

G4B(www.g4b.go.kr)진위확인코드 : tVijhz+q8gE=

Test Report

Korea Marine Equipment Research Institute
35, Mieumsandan 5-ro, Gangseo-gu, Busan 46744, Republic of Korea
Tel +82-51-400-5400, Fax +82-51-400-5410

Report No. : KOMERI-0602-23T184KE
http://www.komeri.re.kr

1. Applicant
- Company Name : OSI CO., LTD.
- Address : 21, Nakdongnam-ro 549beon-gil, Gangseo-gu, Busan, Republic of Korea

2. Equipment under Test
- Name of Product : Load Runner Channel Support
- Model : LR 41S
- Serial No. : -

3. Test Standards : KS B ISO 10055:1996 Mechanical vibration-Vibration testing requirements for shipboard equipment and machinery components

4. Test Period : 2023. 07. 19. ~ 2023. 07. 20.

5. Test Site : ■ Permanent Testing Lab □ On Site Testing (Address: Vibration Lab, 35, Mieumsandan 5-ro, Gangseo-gu, Busan 46744, Republic of Korea)

6. Test Result : Conformity

Note 1. The information of the sample(s) in this test report is provided by the applicant. And you can check website forms.g4b.go.kr to verify the authenticity of the certificate.
Note 2. The result shown in this test report are only limited to to the sample provided by the applicant and do not guarantee the quality of all products of the applicant.
Note 3. This test report shall be used only within the purpose of its defined use and shall not be used for public relation, advertisement and bench.

Affirmation	Tested by	Technical Manager
	Name : Byeong-Uk LEE (Signature)	Name : Se-Woong BAEK (Signature)

This test report is the accredited test results by Korea Laboratory Accreditation Scheme, which signed the ILAC-MRA and related to KS Q ISO/IEC 17025 and KOLAS accreditation.

Date of issue : 2023. 08. 01.

Accredited by KOLAS, Republic of KOREA

The President of Korea Marine Equipment Research Institute

Tech University of Korea Power Convergence Technology Center - Test Report

Electrical Continuity(Earthing)

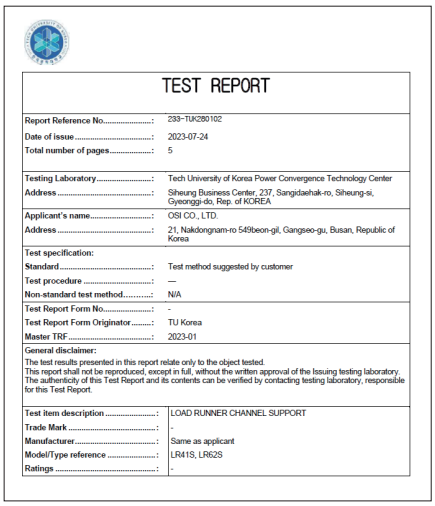

TEST REPORT

Report Reference No.....:	233-TUK280102
Date of issue.....:	2023-07-24
Total number of pages.....:	5
Testing Laboratory.....:	Tech University of Korea Power Convergence Technology Center
Address.....:	Siheung Business Center, 237, Sangidaehak-ro, Siheung-si, Gyeonggi-do, Rep. of KOREA
Applicant's name.....:	OSI CO., LTD.
Address.....:	21, Nakdongnam-ro 549beon-gil, Gangseo-gu, Busan, Republic of Korea
Test specification:	
Standard.....:	Test method suggested by customer
Test procedure.....:	—
Non-standard test method.....:	N/A
Test Report Form No.....:	-
Test Report Form Originator.....:	TU Korea
Master TRF.....:	2023-01
General disclaimer: The test results presented in this report relate only to the object tested. This report shall not be reproduced, except in full, without the written approval of the Issuing testing laboratory. The authenticity of this Test Report and its contents can be verified by contacting testing laboratory, responsible for this Test Report.	
Test item description.....:	LOAD RUNNER CHANNEL SUPPORT
Trade Mark.....:	-
Manufacturer.....:	Same as applicant
Model/Type reference.....:	LR41S, LR62S
Ratings.....:	-

TECHNICAL DATA

UL(An Affiliated of Underwriters Laboratories Inc.) Certificate of Compliance

☑ Seismic Sway Brace System in accordance with UL Regulations

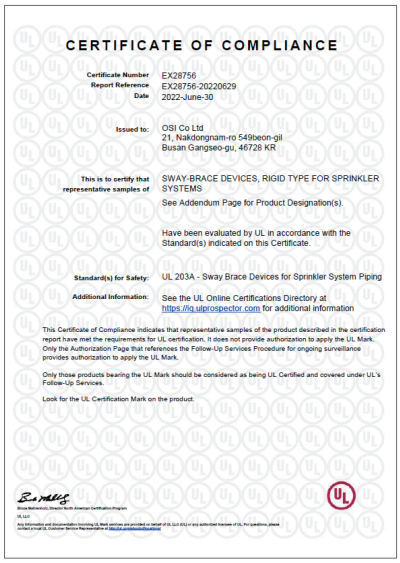

CERTIFICATE OF COMPLIANCE

Certificate Number EX28756
Report Reference EX28756-20220629
Date 2022-June-30

Issued to: OSI Co Ltd
21, Nakdongnam-ro 549beon-gil
Busan Gangseo-gu, 46728 KR

This is to certify that representative samples of SWAY-BRACE DEVICES, RIGID TYPE FOR SPRINKLER SYSTEMS

See Addendum Page for Product Designation(s).

Have been evaluated by UL in accordance with the Standard(s) indicated on this Certificate.

Standard(s) for Safety: UL 203A - Sway Brace Devices for Sprinkler System Piping

Additional Information: See the UL Online Certifications Directory at https://iq.ulprospector.com for additional information

This Certificate of Compliance indicates that representative samples of the product described in the certification report have met the requirements for UL certification. It does not provide authorization to apply the UL Mark. Only the Authorization Page that references the Follow-Up Services Procedure for ongoing surveillance provides authorization to apply the UL Mark.

Only those products bearing the UL Mark should be considered as being UL Certified and covered under UL's Follow-Up Services.

Look for the UL Certification Mark on the product.

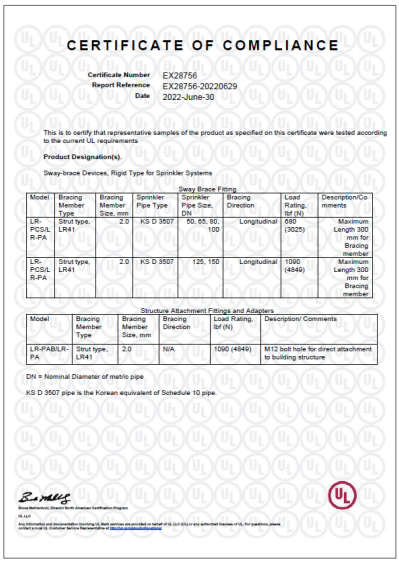

CERTIFICATE OF COMPLIANCE

Certificate Number EX28756
Report Reference EX28756-20220629
Date 2022-June-30

This is to certify that representative samples of the product as specified on this certificate were tested according to the current UL requirements

Product Designation(s):

Sway-brace Devices, Rigid Type for Sprinkler Systems

Sway Brace Fitting

Model	Bracing Member Type	Bracing Member Size, mm	Sprinkler Pipe Type	Sprinkler Pipe Size, DN	Bracing Direction	Load Rating, lbf (N)	Description/Comments
LR-PCS/LR-PA	Strut type, LR41	2.0	KS D 3507	50, 65, 80, 100	Longitudinal	680 (3025)	Maximum Length 300 mm for Bracing member
LR-PCS/LR-PA	Strut type, LR41	2.0	KS D 3507	125, 150	Longitudinal	1090 (4849)	Maximum Length 300 mm for Bracing member

Structure Attachment Fittings and Adapters

Model	Bracing Member Type	Bracing Member Size, mm	Bracing Direction	Load Rating, lbf (N)	Description/ Comments
LR-PAB/LR-PA	Strut type, LR41	2.0	N/A	1090 (4849)	M12 bolt hole for direct attachment to building structure

DN = Nominal Diameter of metric pipe

KS D 3507 pipe is the Korean equivalent of Schedule 10 pipe.

Modular channel

LIMITLESS FOR YOU Environment & Smart Modular system

DOTAIT AMERICA

DO-TAIT AMERICA

Load Runner

Patent No. 30-2021-0052725, 30-2021-0052726

UL LISTED

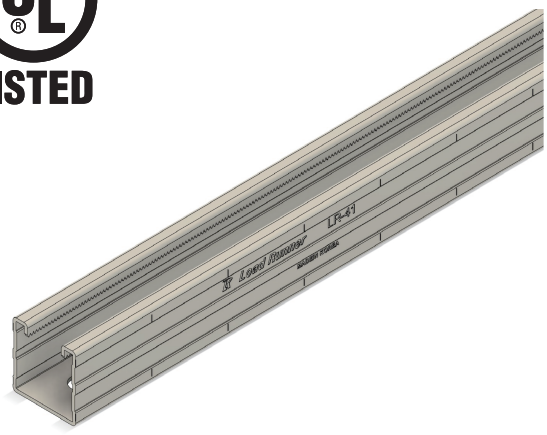

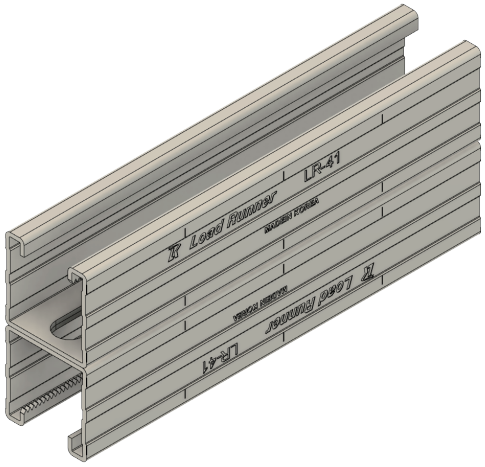

01 FEATURES

- 2mm spacing serration for fine tuning
- 50mm distance mark for cutting and inspection
- 2 level embossing to withstand high load
- Using eco-friendly PosMAC steel,
  highly resistant to corrosion and contamination
- 64*14mm Throat hole
- Brand logo for quality assurance
- Quality/production control by our own production

1

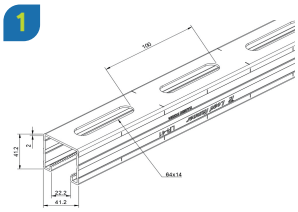

2

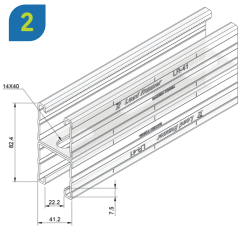

3

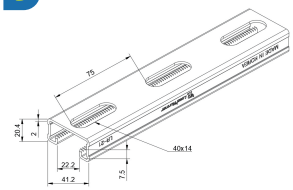

4

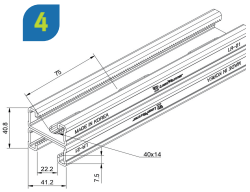

5

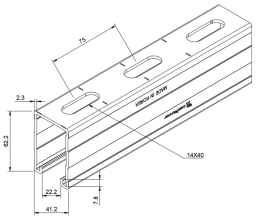

6

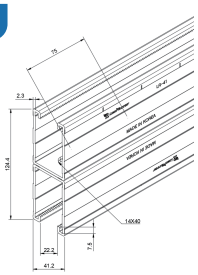

No.	Item No.	Product Description	Unit	Weight (kg)
1	10101101	LR 41S PM 6M	M	2.0
2	10102101	LR 41D PM 6M	M	4.1
3	10103101	LR 21S PM 6M	M	1.4
4	10104101	LR 21D PM 6M	M	2.7
5	10160109	LR 62S PM 6M	M	3.1
6	10161109	LR 62D PM 6M	M	6.3
7	10105101	LR 41S-13X25 PM 6M	M	2.1
8	10106101	LR 21S-13X25 PM 6M	M	1.5
9	10107109	LR 62S-13X25 PM 6M	M	3.1

7

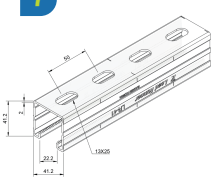

8

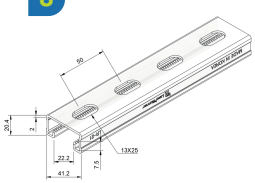

9

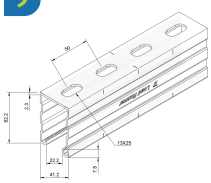

Accessory Fastener

Patent No. 30-2021-0052727, 30-2021-0052728
Patent No. 30-2022-0042969

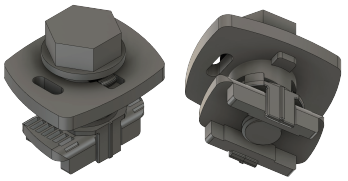

LR Pushbutton

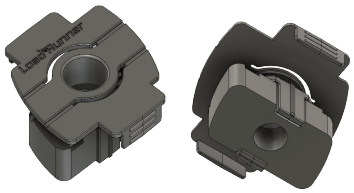

LR Wingnut

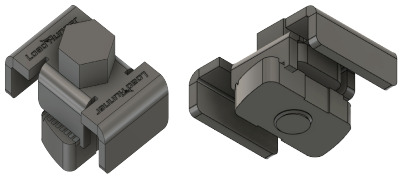

LR Stronger

01 FEATURES

- Unique simple design
- Smart-chin for easy installation with connectors
- GEOCOTE(Zinc-AL) coating strong against corrosion
- 4 side attaching washer for maximizing load resistance
- Grade 8.8 bolt of strong material property
- Inspection hole for visual check
- Fast installation
- Optional increase of load resistance(Friction load prevention)
- Anti transforming when cutting channels

LR Pushbutton

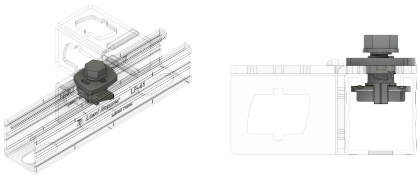

Item No.	Product Description
10205200	LR PB M10 GEO

☑ RECOMMENDED TORQUE: 25Nm

LR Wingnut

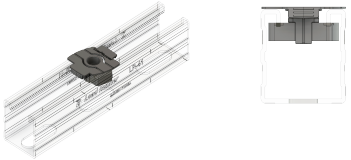

Item No.	Product Description
10305200	LR WN M10 GEO
10346200	LR WN M12 GEO

LR Stronger

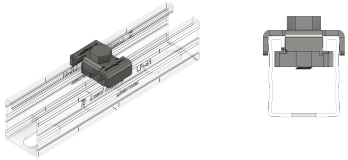

Item No.	Product Description
11305200	LR ST M10 GEO

DOOTAIT AMERICA

Brackets

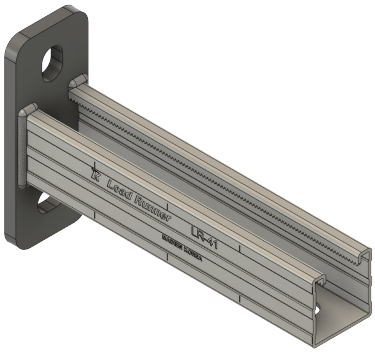

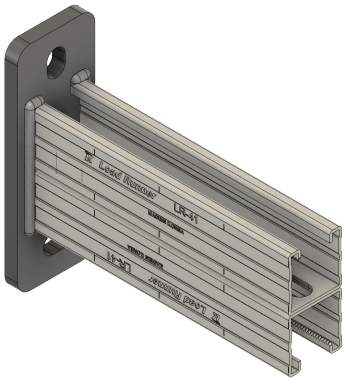

01 FEATURES

- 2mm spacing serration for fine tuning
- GEOCOTE(Zinc-AL) coating strong against corrosion
- Flexibility using slots for anchoring

1 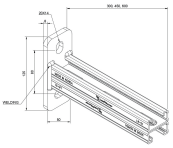

2 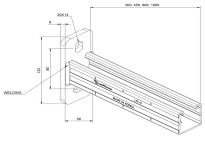

3 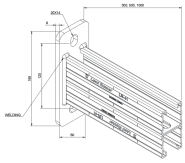

4 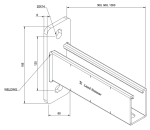

☑ Custom-made for other size of pad and channel is available

No.	Item No.	Product Description	Bracket Length(mm)	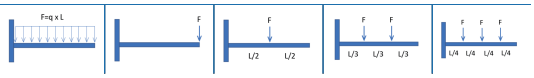 Allowable load(Kn) is applied for a single load(F). If 2 or 3 loads are applied, below figures accordingly need to be doubled or tripled.				
1	11127200	LR BR 21D-300 GEO	300	3.16	1.58	3.16	1.58	1.05
	11128200	LR BR 21D-500 GEO	500	1.90	0.95	1.90	0.95	0.63
	11129200	LR BR 21D-1000 GEO	1000	0.95	0.48	0.95	0.48	0.32
2	11121200	LR BR 41-300 GEO	300	3.12	1.56	3.12	1.56	1.04
	11122200	LR BR 41-500 GEO	500	1.86	0.93	1.86	0.93	0.62
	11123200	LR BR 41-1000 GEO	1000	0.93	0.47	0.93	0.47	0.31
3	11132200	LR BR 41D-300 GEO	300	9.20	4.60	9.20	4.60	3.07
	11133200	LR BR 41D-500 GEO	500	5.54	2.77	5.54	2.77	1.85
	11134200	LR BR 41D-1000 GEO	1000	2.78	1.39	2.78	1.39	0.93
4	11124200	LR BR 62-300 GEO	300	7.52	3.76	7.52	3.76	2.51
	11125200	LR BR 62-500 GEO	500	4.52	2.26	4.52	2.26	1.51
	11126200	LR BR 62-1000 GEO	1000	2.26	1.13	2.26	1.13	0.75

Cantilever Bracing

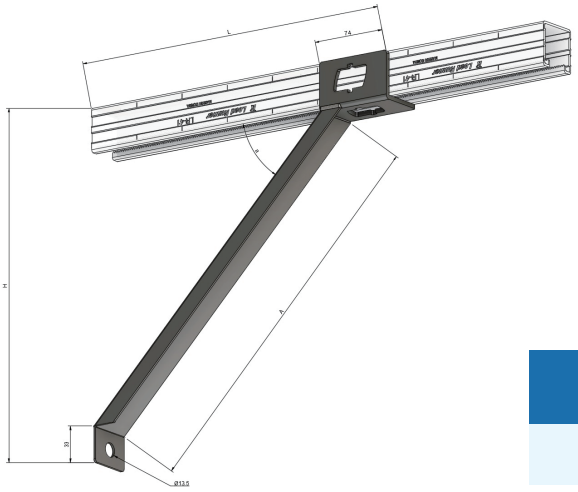

Item No.	Product Description
14000203	LR CANB GEO

01 FEATURES

- Cantilever type for simple fixing to walls
- Suitable for all kinds of channels
- GEOCOTE(Zinc-AL) coating strong against corrosion

Saddle plate

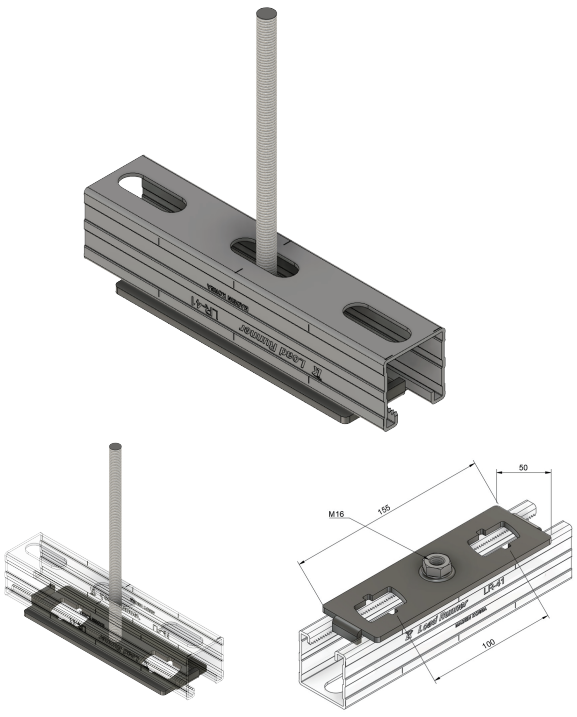

02 FEATURES

- Suitable for all kinds of channels
- GEOCOTE(Zinc-AL) coating strong against corrosio

Item No.	Product Description
11400201	LR SADP GEO

Connector

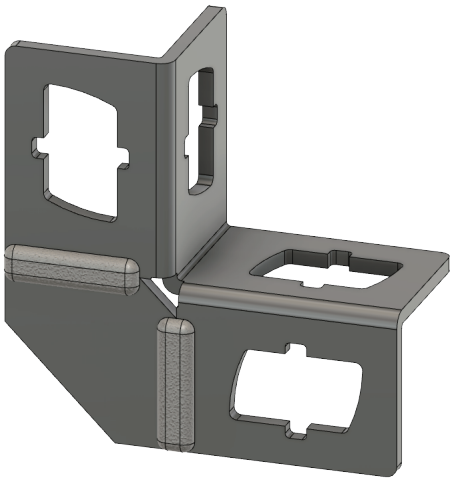

01 FEATURES

- Unique simple designed connecting holes
- Easy and fast installation using by LR Pushbotton
- GEOCOTE(Zinc-AL) coating strong against corrosion

Angle type

1 2 The connectors are suitable for the connection with both ends supported.

No.	Item No.	Product Description
1	10513203	LR CO A4 GEO
2	10541203	LR CO A8 GEO
3	10542203	LR CO A2 GEO

1

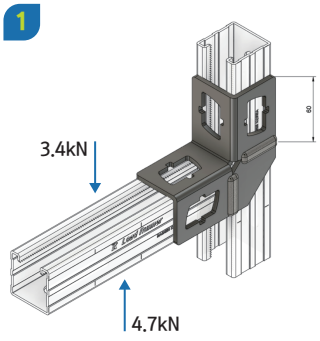

2

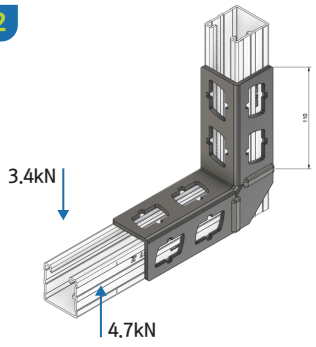

3

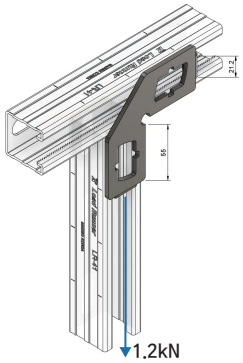

Connector

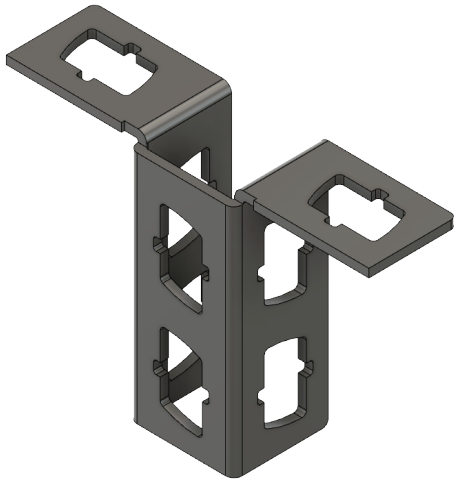

01 FEATURES

- Unique simple designed connecting holes
- Easy and fast installation using by LR Pushbotton
- Various ways connection
- GEOCOTE(Zinc-AL) coating strong against corrosion

T-type

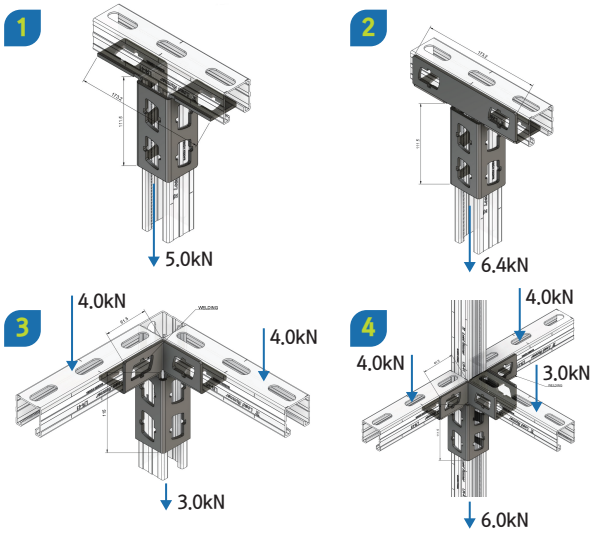

No.	Item No.	Product Description
1	10514203	LR CO T2-2 GEO
2	10515203	LR CO T3-2 GEO
3	10516203	LR CO T3-3 GEO
4	10517203	LR CO T4-3 GEO

3 4 ☑ The connectors are suitable for the connection with both ends supported.

L-type

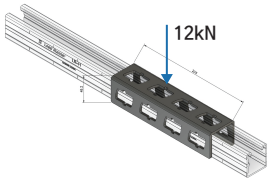

Item No.	Product Description
10518203	LR CO L12 GEO

Angle Bracket

1

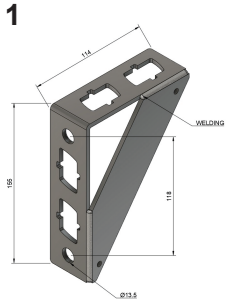

2

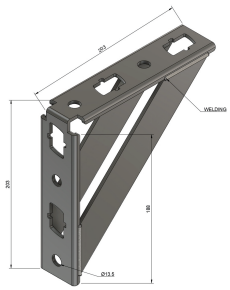

No.	Item No.	Product Description
1	15335203	LR AB SB GEO 4.0
2	15336203	LR AB DB GEO 4.0

01 FEATURES

- Unique simple designed connecting holes
- Easy and fast installation using by LR Pushbotton
- Flexibility using slots for anchoring and channel connection
- GEOCOTE(Zinc-AL) coating strong against corrosion

Hinge Bracket

1



2

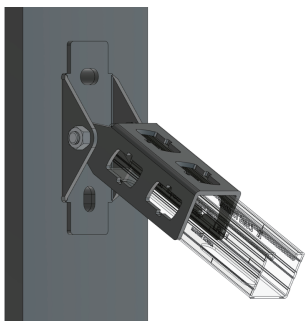

No.	Item No.	Product Description
1	15401203	LR HB 41S GEO 4.0
2	15501203	LR HBS 41S GEO 4.0

Base Connectors

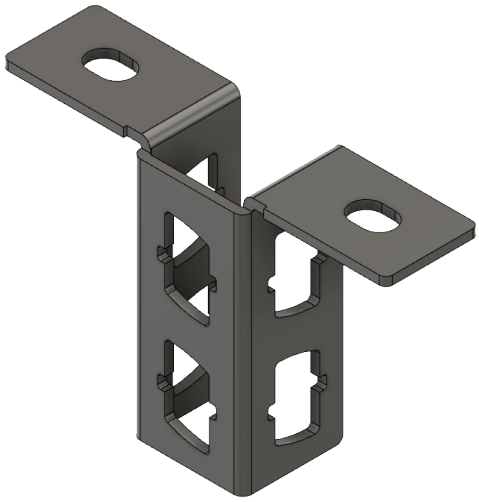

01 FEATURES

- Unique simple designed connecting holes
- Easy and fast installation using by LR Pushbotton
- GEOCOTE(Zinc-AL) coating strong against corrosion
- Anchoring slots for base material

1

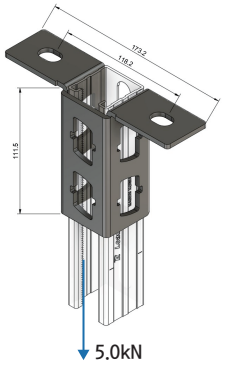

2

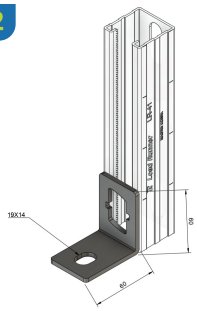

3

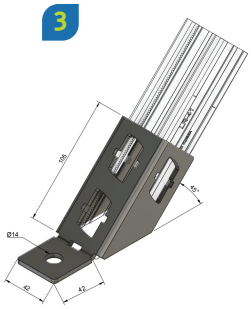

No.	Item No.	Product Description
1	15214203	LR BC T2-2 GEO
2	15242203	LR BC A2 GEO
3	15243203	LR BC A45° GEO

Baseplate

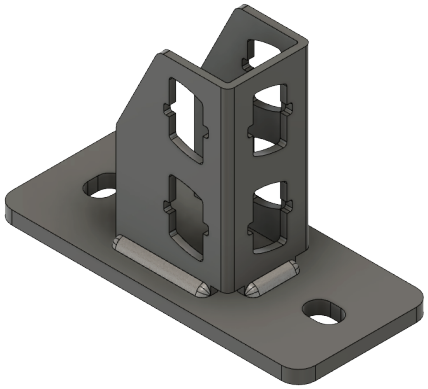

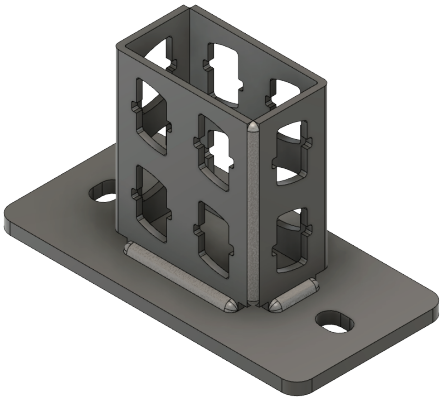

01 FEATURES

- Unique simple designed connecting holes
- Easy and fast installation using by LR Pushbotton
- GEOCOTE(Zinc-AL) coating strong against corrosion
- Stable baseplate with slots for anchoring

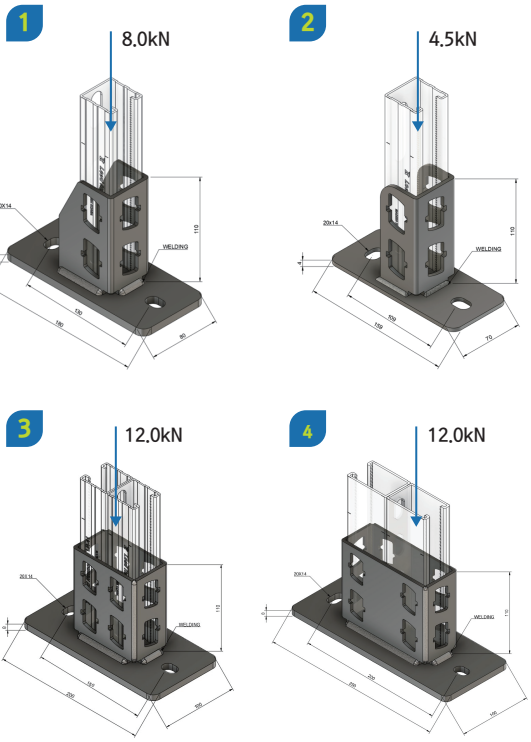

No.	Item No.	Product Description
1	10619200	LR BP 21-62 GEO
2	10659200	LR BP 21-41 GEO
3	10602200	LR BP 41D GEO
4	10661200	LR BP 62D GEO
5	10619208	LR BP 21-62 GEO 6T
6	10602208	LR BP 41D GEO 6T
7	15859204	LR BPV 21-41 GEO
8	15819204	LR BPV 21-62 GEO
9	15802204	LR BPV 41D GEO

Beam Clamp

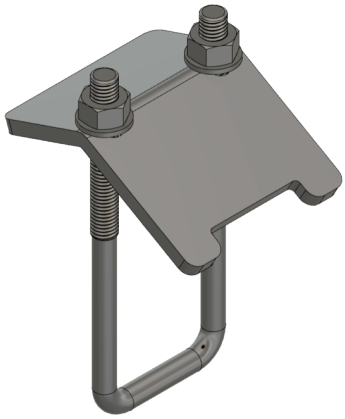

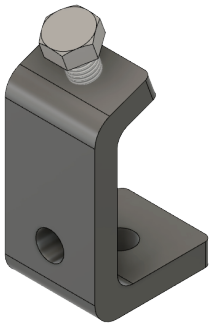

01 FEATURES

- For attaching modular channel to steel beam flange section without drilling or welding
- The clamp is suitable for all standard T-beams
- GEOCOTE(Zinc-AL) coating strong against corrosion

1 2 3 4

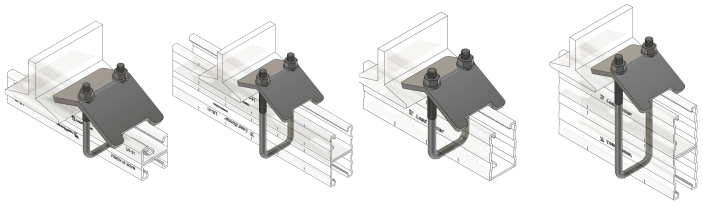

5 6 7

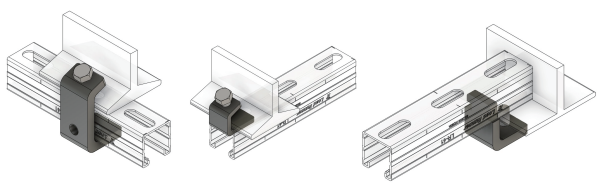

No.	Item No.	Product Description
1	11545207	LR BEAC M8 GEO 21D-41S
2	11505208	LR BEAC M10 GEO 41D
3	11546204	LR BEAC M10 GEO 62S
4	11505261	LR BEAC M10 GEO 62D
5	11646206	LR BEAC-C M12 GEO 10
6	11646208	LR BEAC-C M12 GEO 6.0
7	11746206	LR BEAC-L M12 GEO 10

Channel Clamp

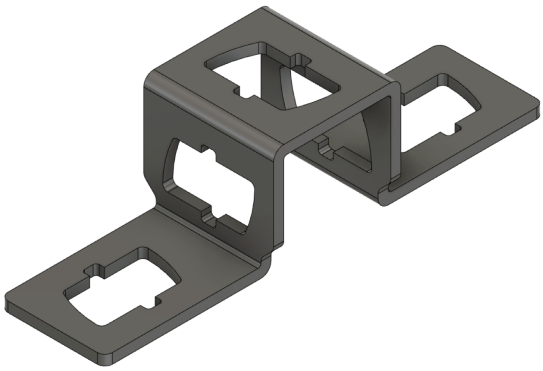

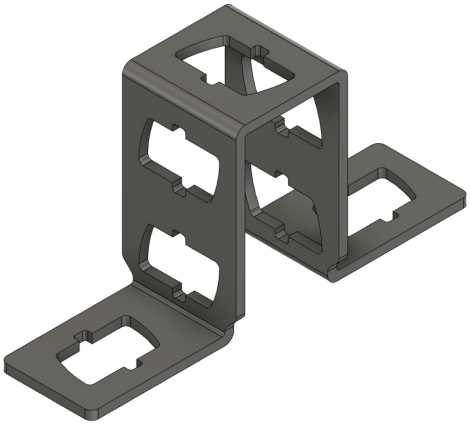

01 FEATURES

- Unique simple designed connecting holes
- Easy and fast installation using by LR Pushbotton
- Various ways connection
- GEOCOTE(Zinc-AL) coating strong against corrosion

1

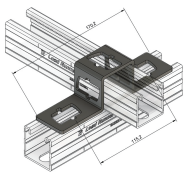

2

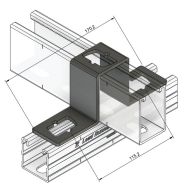

3

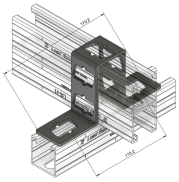

4

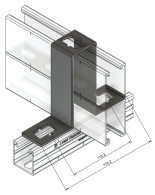

No.	Item No.	Product Description
1	11801203	LR CC 41S GEO
2	11860203	LR CC 62S GEO
3	11802203	LR CC 41D GEO
4	11861203	LR CC 62D GEO
5	11862203	LR CC 2X41S GEO
6	11863203	LR CC 41SB GEO
7	11884203	LR CC 62SV GEO
8	11886203	LR CC 62DV GEO

5

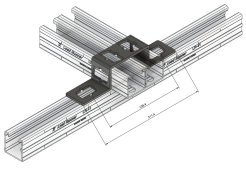

6

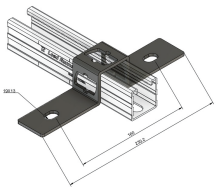

7

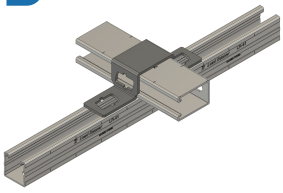

8

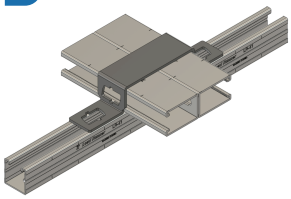

End Cap

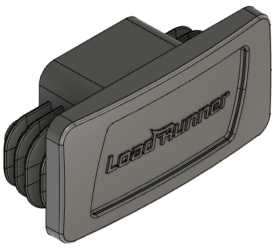
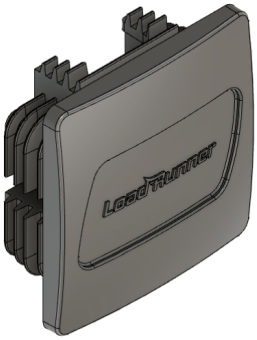
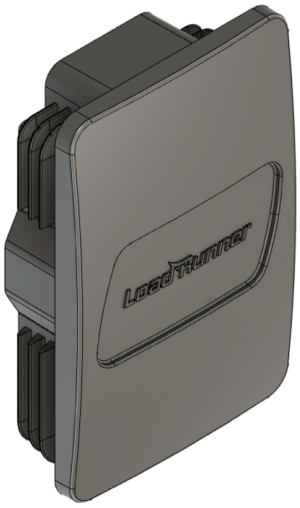

01 FEATURES

- Flame-retardant material
- Brand logo for quality assurance(Load Runner)

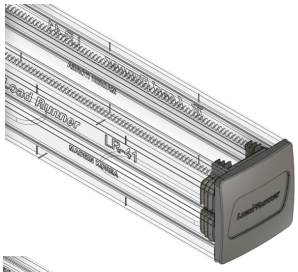
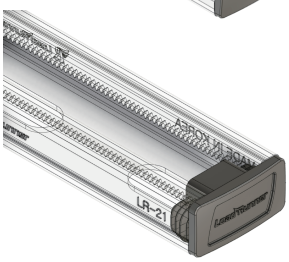
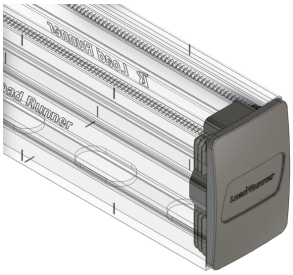

Item No.	Product Description
10401400	LR CAP 41
10403900	LR CAP 21
10460900	LR CAP 62

Accessories For Installation

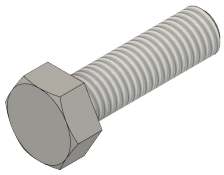

Item No.	Product Description
12650200	LR HEBO M8X25 GEO
12610200	LR HEBO M10X25 GEO
12651200	LR HEBO M12X25 GEO
12652200	LR HEBO M12X30 GEO
12653200	LR HEBO M16X30 GEO

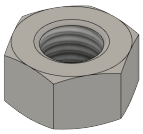

Item No.	Product Description
12745200	LR HENU M8 GEO
12705200	LR HENU M10 GEO
12746200	LR HENU M12 GEO
12748200	LR HENU M16 GEO
12749200	LR HENU M20 GEO

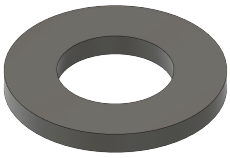

Item No.	Product Description
10745200	LR WA M8 GEO
10705200	LR WA M10 GEO
10746200	LR WA M12 GEO
10748200	LR WA M16 GEO



Item No.	Product Description
12950200	LR TRC M8X25 GEO
12954200	LR TRC M10X30 GEO
12955200	LR TRC M12X40 GEO
12956200	LR TRC M16X50 GEO

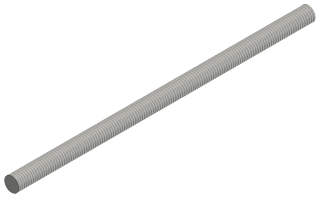

Item No.	Product Description
12805200	LR TR M10 GEO
12846200	LR TR M12 GEO
12848200	LR TR M16 GEO
12849200	LR TR M20 GEO

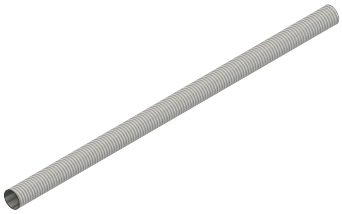

Item No.	Product Description
13070200	LR TP D1/2" GEO
13071200	LR TP D3/4" GEO
13072200	LR TP D1" GEO
13073200	LR TP D1, 1/4" GEO

Build a variety of customized support

Limitless for you!

From basic U support to JB racks DOOTAIT supplies custom-made supports in various shape and size.

U support

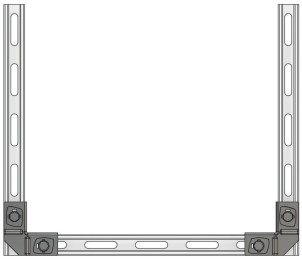

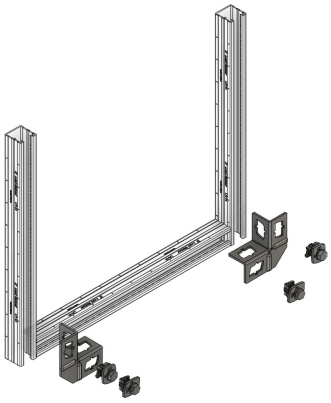

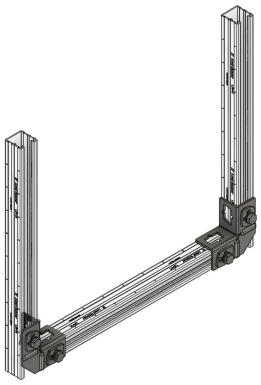

JB rack

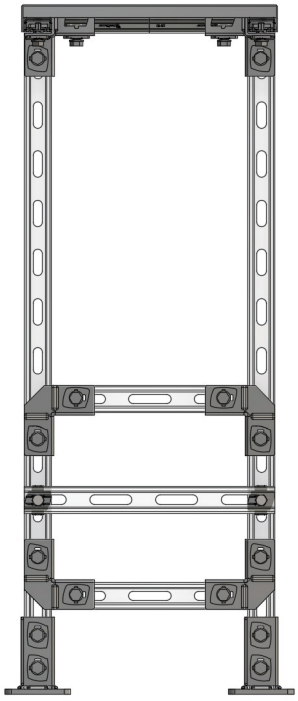

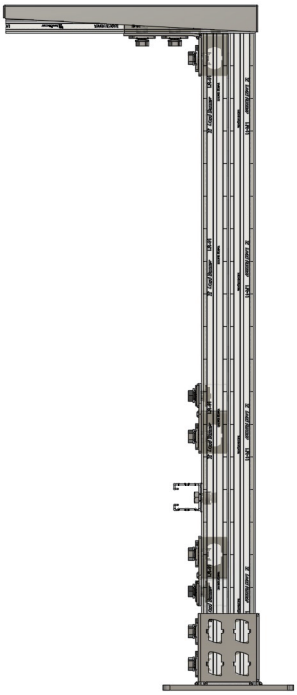

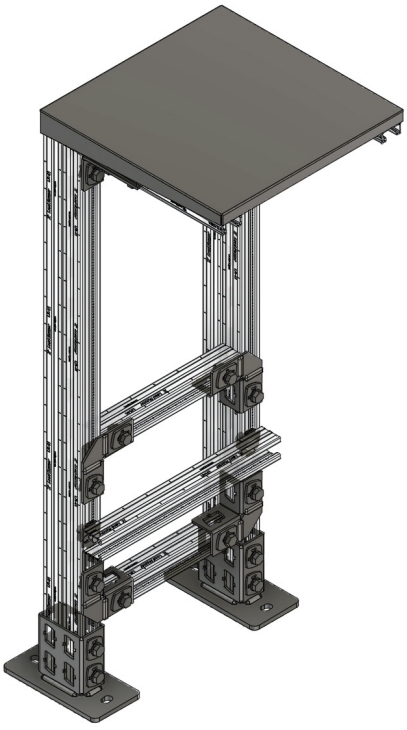

Pipe Clamp

Light-duty

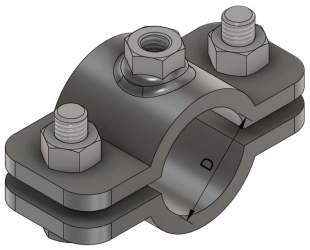

Item No.	Product Description
14070200	LR PCL D1/2" GEO
14071200	LR PCL D3/4" GEO
14072200	LR PCL D1" GEO
14073200	LR PCL D1, 1/4" GEO
14074200	LR PCL D1, 1/2" GEO
14075200	LR PCL D2" GEO
14076200	LR PCL D2, 1/4" GEO
14077200	LR PCL D2, 1/2" GEO
14078200	LR PCL D3" GEO

Heavy-duty

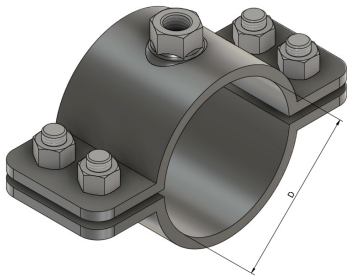

Item No.	Product Description
14179200	LR PCH D4" GEO
14180200	LR PCH D5" GEO
14181200	LR PCH D6" GEO
14182200	LR PCH D8" GEO

With lining for Insulation

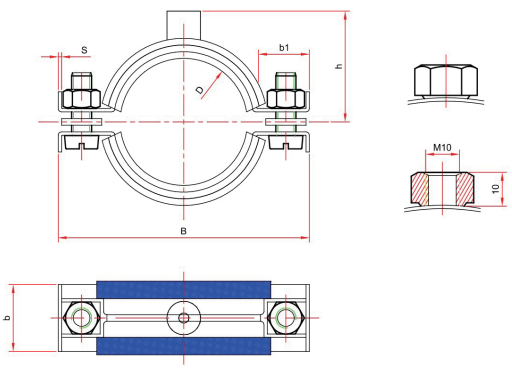

Item No.	Product Description
14470200	LR PCIL D1/2" GEO
14471200	LR PCIL D3/4" GEO
14472200	LR PCIL D1" GEO
14473200	LR PCIL D1, 1/4" GEO
14474200	LR PCIL D1, 1/2" GEO
14475200	LR PCIL D2" GEO
14477200	LR PCIL D2, 1/2" GEO
14478200	LR PCIL D3" GEO

☑ Other sizes and various linings are available

Pipe Clamp

Pipe Clamp Base plate

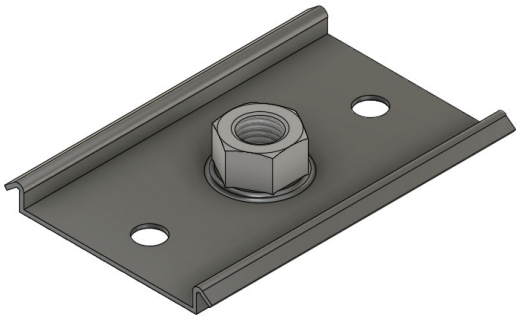

Item No.	Product Description
14249200	LR PCBP M20 GEO
14248200	LR PCBP M16 GEO

☑ Custom-made for other size is available

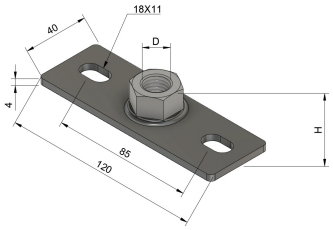

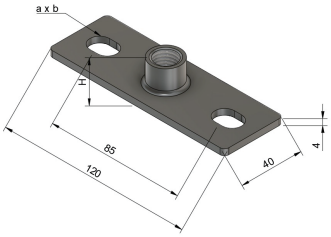

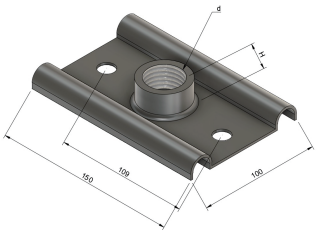

Adaptor

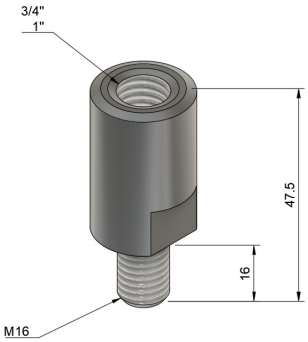

Item No.	Product Description
14371200	LR PCA D3/4" GEO
14372200	LR PCA D1" GEO

Pape Clamp

DOOTAIT supplies custom-made parts for various applications.





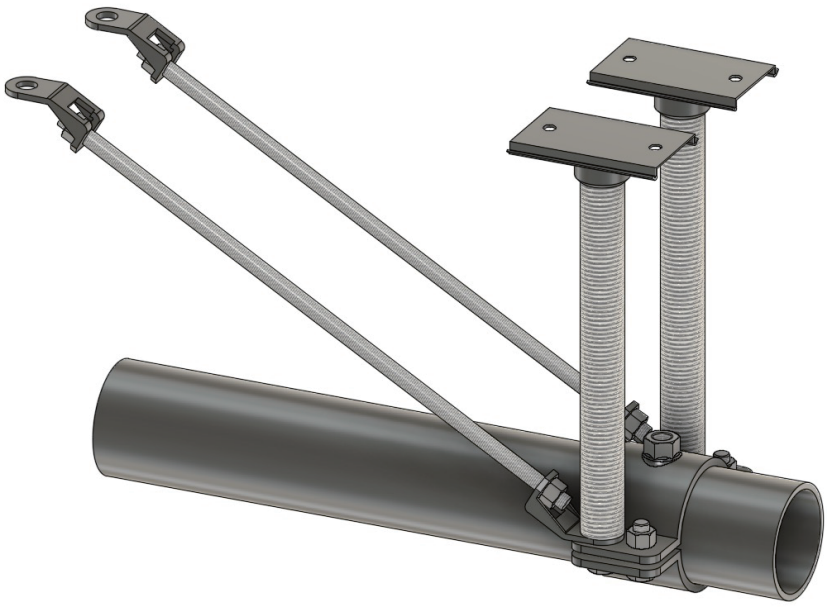

U-Band

Patent No. 30-2022-0042968

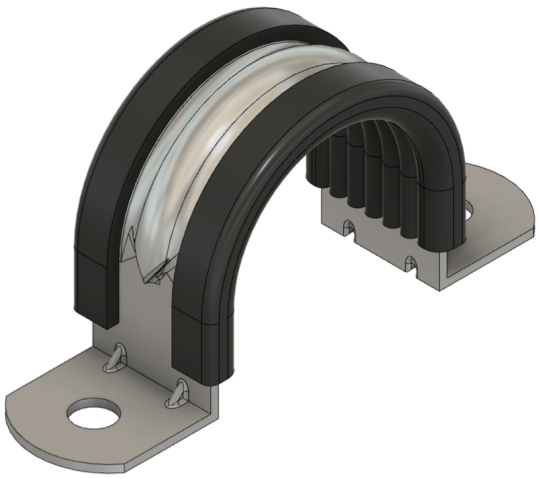

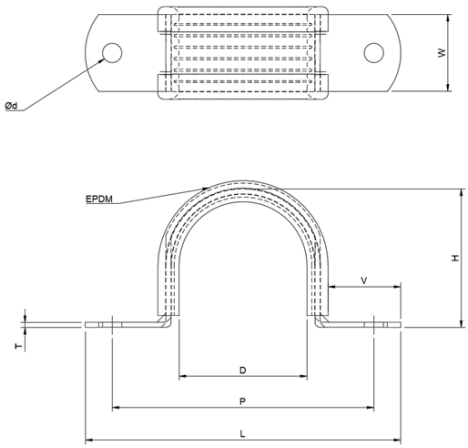

Material: Electrical Zinc Plating

01 FEATURES

- Upgraded design with embossing and connecting hinge strong against tortion and deformation
- Both hexagonal bolt and T bolt are available
- Easy installation by mitigating interference part of impact drill socket
- Custom-made(other sizes not included in below standard range) is available

*12t of pipe pad is available

U-BAND TYPE A Unit(mm)

Item no.	Product description	ND	OD	BAND								BOLT SIZE	LINER	PIPE PAD	
				D	T	W	V	H	C	L	Ø			T	W
46283015	UB TAA ID 15	15	22	32	2	40	30	31	60	92	11	M10	5.0 X 40	4	22
46283020	UB TAA ID 20	20	27	37	2	40	30	36	65	97	11	M10	5.0 X 40	4	27
46283025	UB TAA ID 25	25	34	44	2	40	30	43	72	104	11	M10	5.0 X 40	4	34
46283032	UB TAA ID 32	32	43	53	2	40	30	52	81	113	11	M10	5.0 X 40	4	43
46283040	UB TAA ID 40	40	49	59	2	40	30	58	87	119	11	M10	5.0 X 40	4	49
46283050	UB TAA ID 50	50	61	71	2.6	40	30	70.6	99	131	11	M10	5.0 X 40	4	50
46283065	UB TAA ID 65	65	76	86	2.6	40	30	85.6	114	146	11	M10	5.0 X 40	4	50
46283080	UB TAA ID 80	80	89	99	2.6	40	30	98.6	127	159	11	M10	5.0 X 40	4	50
462830100	UB TAA ID 100	100	114	124	2.6	40	32.6	123.6	157.2	189.2	13	M12	5.0 X 40	4	100
462830125	UB TAA ID 125	125	140	150	2.6	40	32.6	144.6	183.2	215.2	13	M12	5.0 X 40	4	100
462830150	UB TAA ID 150	150	165	175	2.6	40	32.6	169.6	208.2	240.2	13	M12	5.0 X 40	4	100
462830200	UB TAA ID 200	200	217	227	4	40	34	218	263	295	13	M12	5.0 X 40	4	100
462830250	UB TAA ID 250	250	267	277	4	40	34	263	313	345	13	M12	5.0 X 40	4	200
462830300	UB TAA ID 300	300	319	329	4	40	34	315	365	397	13	M12	5.0 X 40	4	200
462830350	UB TAA ID 350	350	356	366	4	40	34	367	402	434	13	M12	5.0 X 40	4	200
462830400	UB TAA ID 400	400	406	416	4	40	34	417	452	484	13	M12	5.0 X 40	4	200
462830450	UB TAA ID 450	450	457	467	4	40	34	468	503	535	13	M12	5.0 X 40	4	200
462830500	UB TAA ID 500	500	508	518	4	40	34	519	554	586	13	M12	5.0 X 40	4	200
462830550	UB TAA ID 550	550	559	569	4	40	34	570	605	637	13	M12	5.0 X 40	4	200
462830600	UB TAA ID 600	600	610	620	4	40	34	621	656	688	13	M12	5.0 X 40	4	200
462830700	UB TAA ID 700	700	711	721	4	40	34	722	757	789	13	M12	5.0 X 40	4	200
462830800	UB TAA ID 800	800	813	823	4	40	34	824	859	891	13	M12	5.0 X 40	4	200
462830900	UB TAA ID 900	900	914	924	4	40	34	925	960	992	13	M12	5.0 X 40	4	200
4628301000	UB TAA ID 1000	1000	1016	1026	4	40	34	1027	1062	1094	13	M12	5.0 X 40	4	200

U-Band

Patent No. 30-2022-0042968

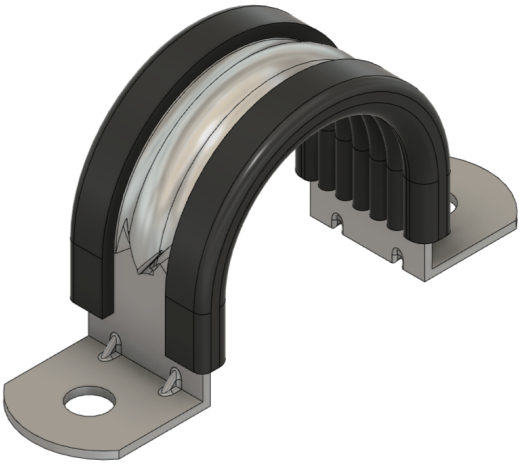

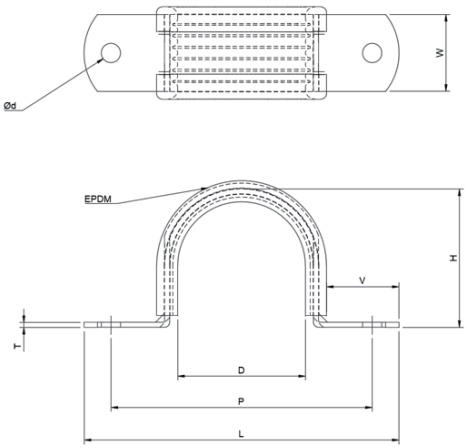

Material: Electrical Zinc Plating

01 FEATURES

- Upgraded design with embossing and connecting hinge strong against tortion and deformation
- Both hexagonal bolt and T bolt are available
- Easy installation by mitigating interference part of impact drill socket
- Custom-made(other sizes not included in below standard range) is available

*12t of pipe pad is available

U-BAND TYPE PE Unit(mm)

Item no.	Product description	ND	OD	BAND								BOLT SIZE	LINER	PIPE PAD	
				D	T	W	V	H	C	L	Ø			T	W
44683020	UB TPE 20	20	20	30	2	40	30	29	58	90	11	M10	5.0 X 40	4	20
44683025	UB TPE 25	25	25	35	2	40	30	34	63	95	11	M10	5.0 X 40	4	25
44683032	UB TPE 32	32	32	42	2	40	30	41	70	102	11	M10	5.0 X 40	4	32
44683040	UB TPE 40	40	40	50	2	40	30	49	78	110	11	M10	5.0 X 40	4	40
44683050	UB TPE 50	50	50	60	2	40	30	59	88	120	11	M10	5.0 X 40	4	50
44683063	UB TPE 63	63	63	73	2	40	30	72	101	133	11	M10	5.0 X 40	4	63
44683075	UB TPE 75	75	75	85	2	40	30	84	113	145	11	M10	5.0 X 40	4	75
44683090	UB TPE 90	90	90	100	2	40	30	99	128	160	11	M10	5.0 X 40	4	90
446830110	UB TPE 110	110	110	120	2	40	33	119	154	186	13	M12	5.0 X 40	4	100
446830140	UB TPE 140	140	140	150	2.6	40	33	149.6	184	216	13	M12	5.0 X 40	4	100
446830160	UB TPE 160	160	160	170	2.6	40	33	169.6	204	236	13	M12	5.0 X 40	4	100
446830225	UB TPE 225	225	225	235	3	40	34	235	271	303	13	M12	5.0 X 40	4	200
446830280	UB TPE 280	280	280	290	3	40	34	290	326	358	13	M12	5.0 X 40	4	200
446830315	UB TPE 315	315	315	325	3	50	34	325	365	393	13	M12	5.0 X 40	4	200
446830355	UB TPE 355	355	355	365	3	50	34	365	405	433	13	M12	5.0 X 40	4	200
446830400	UB TPE 400	400	400	410	4	50	34	411	450	478	13	M12	5.0 X 40	4	200
446830450	UB TPE 450	450	450	460	4	50	34	461	500	528	13	M12	5.0 X 40	4	200
446830500	UB TPE 500	500	500	510	4	50	34	511	550	578	13	M12	5.0 X 40	4	200
446830560	UB TPE 560	560	560	570	4	50	34	571	610	638	13	M12	5.0 X 40	4	200
446830630	UB TPE 630	630	630	640	4	50	34	641	680	708	13	M12	5.0 X 40	4	200
446830710	UB TPE 710	710	710	720	4	50	34	721	760	788	13	M12	5.0 X 40	4	200
446830800	UB TPE 800	800	800	810	4	50	34	811	850	878	13	M12	5.0 X 40	4	200
446830900	UB TPE 900	900	900	910	4	50	34	911	950	978	13	M12	5.0 X 40	4	200
4468301000	UB TPE 1000	1000	1000	1010	4	50	34	1011	1050	1078	13	M12	5.0 X 40	4	200

U-Band

Patent No. 30-2022-0042968

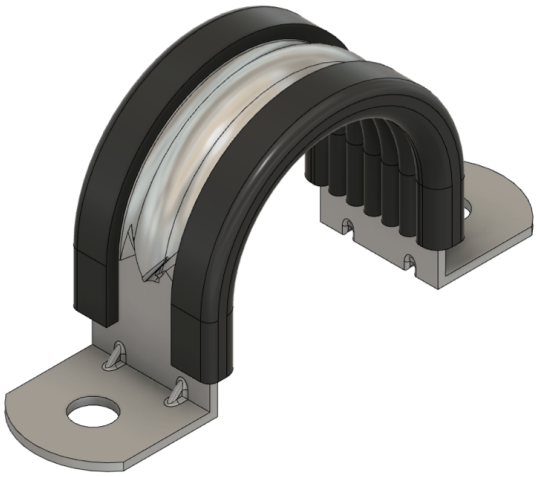

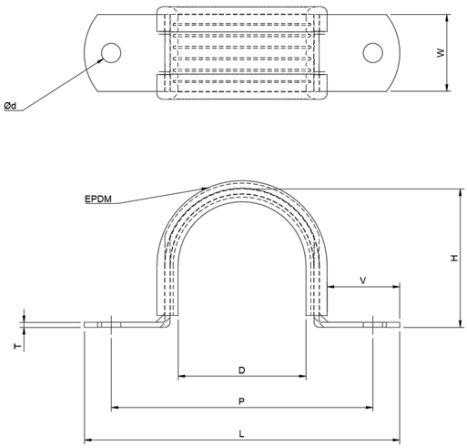

Material: Electrical Zinc Plating

01 FEATURES

- Upgraded design with embossing and connecting hinge strong against tortion and deformation
- Both hexagonal bolt and T bolt are available
- Easy installation by mitigating interference part of impact drill socket
- Custom-made(other sizes not included in below standard range) is available

U-BAND TYPE C — Unit(mm)

Item no.	Product description	D	P	L	H	W	T	∅	V
44783050	UB TC ID 50	50	102	120	52	40	2	11	35
44783075	UB TC ID 75	75	127	145	77	40	2	11	35
447830100	UB TC ID 100	100	158	180	102	40	2	13	40
447830125	UB TC ID 125	125	183	205	127	40	2	13	40
447830150	UB TC ID 150	150	214	230	152	40	2.6	13	40
447830200	UB TC ID 200	200	264	280	202	40	3	13	40
447830225	UB TC ID 225	225	289	305	227	40	3	13	40
447830250	UB TC ID 250	250	314	334	252	40	3	13	42
447830280	UB TC ID 280	275	339	359	277	40	3	13	42
447830300	UB TC ID 300	300	364	384	302	40	3	13	42

U-BAND TYPE D — Unit(mm)

Item no.	Product description	D	P	L	H	W	T	∅	V
44883020	UB TD ID 20	22	74	92	22	40	2	6.5	35
44883025	UB TD ID 25	26	78	96	26	40	2	6.5	35
44883030	UB TD ID 30	32	84	102	32	40	2	6.5	35
44883040	UB TD ID 40	38	90	108	38	40	2	6.5	35
44883050	UB TD ID 50	48	100	118	48	40	2	6.5	35
44883060	UB TD ID 60	60	112	130	60	40	2	6.5	35
44883075	UB TD ID 75	76	128	146	76	40	2	6.5	35
44883090	UB TD ID 90	89	141	159	89	40	2	6.5	35
448830120	UB TD ID 120	114	172	194	114	40	2	6.5	40

U-Band

Patent No. 30-2022-0042968

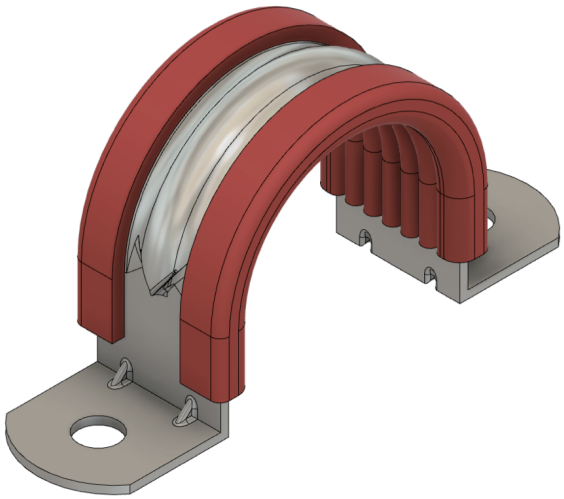

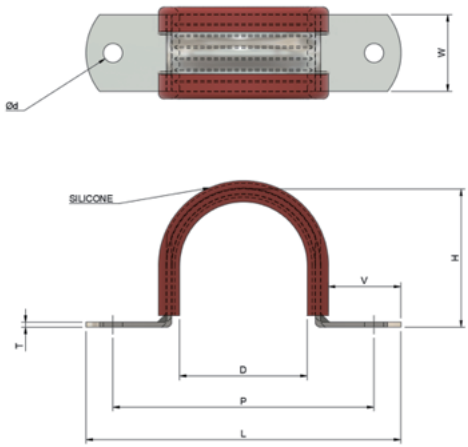

Material: Electrical Zinc Plating

01 FEATURES

- Upgraded design with embossing and connecting hinge strong against tortion and deformation
- Both hexagonal bolt and T bolt are available
- Easy installation by mitigating interference part of impact drill socket
- Custom-made(other sizes not included in below standard range) is available

U-BAND TYPE E — Unit(mm)

Item no.	Product description	D	P	L	H	W	T	∅	V
44983015	UB TE ID 15	13	65	83	13	28	2	11	35
44983020	UB TE ID 20	20	72	90	20	28	2	11	35
44983025	UB TE ID 25	26	78	96	26	28	2	11	35
44983030	UB TE ID 30	32	84	102	32	28	2	11	35
44983040	UB TE ID 40	39	91	109	39	28	2	11	35
44983050	UB TE ID 50	51	103	121	51	28	2	11	35
44983060	UB TE ID 60	64	116	134	64	28	2	11	35
44983070	UB TE ID 70	77	129	147	77	28	2	11	35
449830100	UB TE ID 100	102	160	182	102	28	2	13	40
449830125	UB TE ID 125	127	185	207	127	28	2	13	40
449830150	UB TE ID 150	153	217	233	153	40	2.6	13	40
449830200	UB TE ID 200	204	268	284	204	40	3	13	40
449830250	UB TE ID 250	254	318	338	254	40	3	13	42
449830300	UB TE ID 300	305	369	389	305	40	3	13	42

Liner

- For LoadRunner (EPDM)



Item No.	Product Description
456001203	UB LN EPDM 10M 4T
456001204	UB LN EPDM 10M 8T
456001213	UB LN EPDM 10M 12T

T-bolt

- For U-band installation

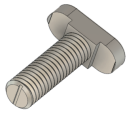

Item No.	Product Description
131541100	LR TB M10X30 ZP
131521100	LR TB M12X30 ZP

U-Band

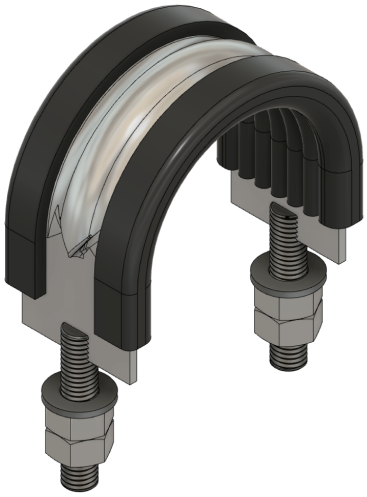

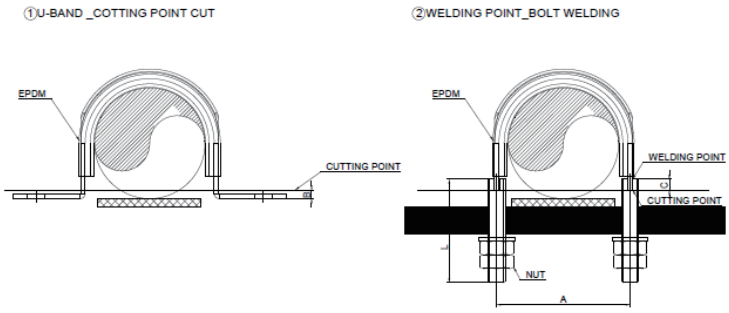

Material: Electrical Zinc Plating

01 FEATURES

- Upgraded design with embossing strong against tortion and deformation
- Custom-made(other sizes not included in below standard range) is available

Bolting U-BAND TYPE A — Unit(mm)

Item no.	Product description	PIPE O.D	A	B	C	W	T	BOLT SIZE
47083020	UB BA ID 20	22	32	5	8	28	2	M10
47083030	UB BA ID 30	27	38	5	8	28	2	M10
47083035	UB BA ID 35	34	44	5	8	28	2	M10
47083040	UB BA ID 40	43	53	5	8	28	2	M10
47083050	UB BA ID 50	49	59	5	8	28	2	M10
47083060	UB BA ID 60	61	71	5	8	28	2	M10
47083070	UB BA ID 70	76	87	15	15	28	2	M12
47083090	UB BA ID 90	89	100	15	15	28	2	M12
470830110	UB BA ID 110	114	125	15	15	28	2	M12
470830140	UB BA ID 140	140	151	20	20	32	2.6	M12
470830160	UB BA ID 160	165	177	20	20	32	2.6	M12
470830220	UB BA ID 220	216	228	20	20	40	3	M12
470830250	UB BA ID 250	267	279	20	20	40	3	M12
470830300	UB BA ID 300	319	330	20	20	40	3	M12
470830350	UB BA ID 350	356	367	20	20	40	3	M12
470830400	UB BA ID 400	406	419	20	20	50	4	M12
470830450	UB BA ID 450	457	470	20	20	50	4	M12
470830500	UB BA ID 500	509	521	20	20	50	4	M12
470830550	UB BA ID 550	589	601	20	20	50	4	M12
470830600	UB BA ID 600	610	622	20	20	50	4	M12
470830700	UB BA ID 700	711	724	20	20	50	4	M12
470830800	UB BA ID 800	813	825	20	20	50	4	M12
470830900	UB BA ID 900	914	927	20	20	50	4	M12
470831000	UB BA ID 1000	1016	1028	20	20	50	4	M12

U-Band

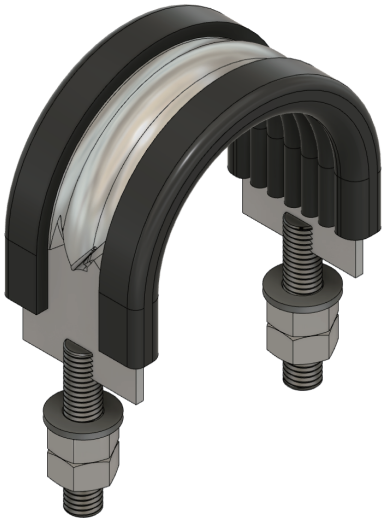

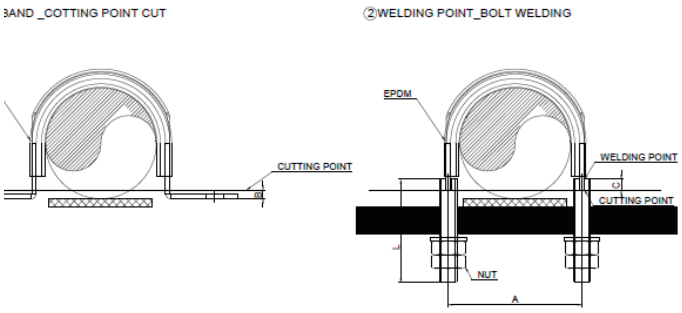

Material: Electrical Zinc Plating

01 FEATURES

- Upgraded design with embossing strong against tortion and deformation
- Custom-made(other sizes not included in below standard range) is available

Bolting U-BAND TYPE PE — Unit(mm)

Item no.	Product description	PIPE O.D	A	B	C	W	T	BOLT SIZE
47183020	UB BPE ID 20	20	30	5	8	28	2	M10
47183025	UB BPE ID 25	25	35	5	8	28	2	M10
47183030	UB BPE ID 30	32	42	5	8	28	2	M10
47183040	UB BPE ID 40	40	50	5	8	28	2	M10
47183050	UB BPE ID 50	50	60	5	8	28	2	M10
47183060	UB BPE ID 60	63	73	5	8	28	2	M10
47183075	UB BPE ID 75	75	85	15	15	28	2	M12
47183090	UB BPE ID 90	90	100	15	15	28	2	M12
471830110	UB BPE ID 110	110	120	15	15	28	2	M12
471830140	UB BPE ID 140	140	151	20	20	32	2.6	M12
471830160	UB BPE ID 160	160	171	20	20	32	2.6	M12
471830250	UB BPE ID 250	225	236	20	20	40	3	M12
471830280	UB BPE ID 280	280	291	20	20	40	3	M12
471830300	UB BPE ID 300	315	326	20	20	40	3	M12
471830350	UB BPE ID 350	355	366	20	20	40	3	M12
471830400	UB BPE ID 400	400	412	20	20	50	4	M12
471830450	UB BPE ID 450	450	462	20	20	50	4	M12
471830500	UB BPE ID 500	500	512	20	20	50	4	M12
471830550	UB BPE ID 550	560	572	20	20	50	4	M12
471830600	UB BPE ID 600	630	642	20	20	50	4	M12
471830700	UB BPE ID 700	710	722	20	20	50	4	M12
471830800	UB BPE ID 800	800	812	20	20	50	4	M12
471830900	UB BPE ID 900	900	912	20	20	50	4	M12
4718301000	UB BPE ID 1000	1000	1012	20	20	50	4	M12

U-Bolt

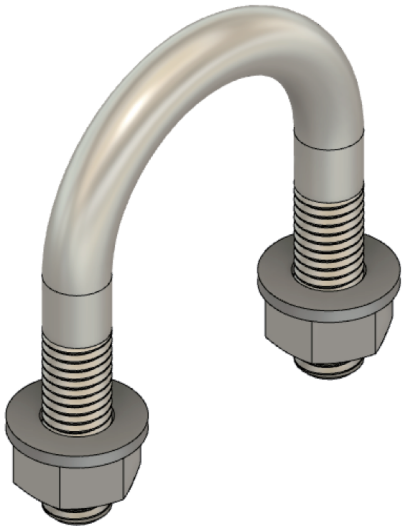

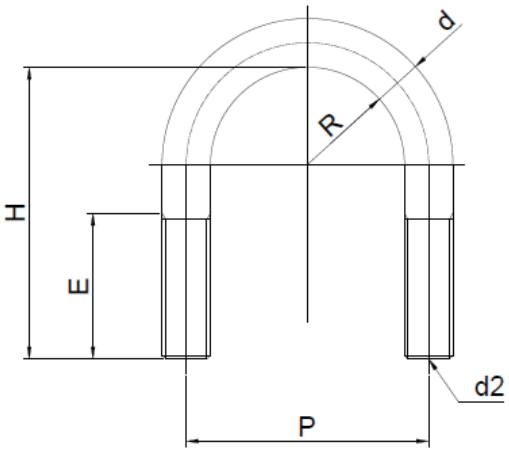

Material: Electrical Zinc Plating

U-BOLT								Unit(mm)
Item no.	Product description	PIPE O.D	R	d	d2	H	E	P
47200001	UB UBB 01	22	12	10	M10	39	20	34
47200002	UB UBB 02	27	15	10	M10	45	20	40
47200003	UB UBB 03	34	18	10	M10	52	20	46
47200004	UB UBB 04	43	23	10	M10	60	20	56
47200005	UB UBB 05	49	26	10	M10	66	20	62
47200006	UB UBB 06	61	32	10	M10	78	20	74
47200007	UB UBB 07	76	40	12	M12	98	25	92
47200008	UB UBB 08	89	46	12	M12	110	25	104
47200009	UB UBB 09	22	12	10	M10	47	30	34
47200010	UB UBB 10	27	15	10	M10	53	30	40
47200011	UB UBB 11	34	18	10	M10	60	30	46
47200012	UB UBB 12	43	23	10	M10	68	30	56
47200013	UB UBB 13	49	26	10	M10	74	30	62
47200014	UB UBB 14	61	32	10	M10	86	30	74
47200015	UB UBB 15	76	40	12	M12	108	35	92
47200016	UB UBB 16	89	46	12	M12	120	35	104
47200017	UB UBB 17	114	59	16	M16	141	50	134
47200018	UB UBB 18	140	72	16	M16	167	50	160
47200019	UB UBB 19	165	85	16	M16	192	50	186
47200020	UB UBB 20	216	111	20	M20	249	60	242
47200021	UB UBB 21	242	124	20	M20	274	60	268
47200022	UB UBB 22	267	137	20	M20	300	60	294
47200023	UB UBB 23	319	163	24	M24	357	70	350
47200024	UB UBB 24	356	181	24	M24	394	70	386
47200025	UB UBB 25	406	207	24	M24	444	70	438
47200026	UB UBB 26	457	233	30	M30	505	85	496
47200027	UB UBB 27	509	259	30	M30	543	85	548
47200028	UB UBB 28	589	284	30	M30	595	85	598
47200029	UB UBB 29	610	310	36	M36	665	100	656
47200030	UB UBB 30	660	335	36	M36	715	100	706
47200031	UB UBB 31	711	361	36	M36	765	100	758
47200032	UB UBB 32	762	387	36	M36	815	100	810
47200033	UB UBB 33	813	413	42	M42	870	110	868


DOTAIT
AMERICA

LIMITLESS FOR YOU
CHANNEL SYSTEM

DO TA IT AMERICA
16333 S. Great Oaks Dr. STE 124
Round Rock, Texas, US | T . +1 (737) 292-4545